CSC/TM-83/6107

DATA PROCESSING AND PROGRAMMER'S GUIDE FOR THE HELIOS-1 AND -2 COSMIC RAY EXPERIMENTS

Helios Documentation kept with group. See elsewhere for main

Prepared for
NATIONAL AERONAUTICS AND SPACE ADMINISTRATION
Goddard Space Flight Center
Greenbelt, Maryland

document named above.

CONTRACT NAS 5-24350
Task Assignment 721

SEPTEMBER 1983

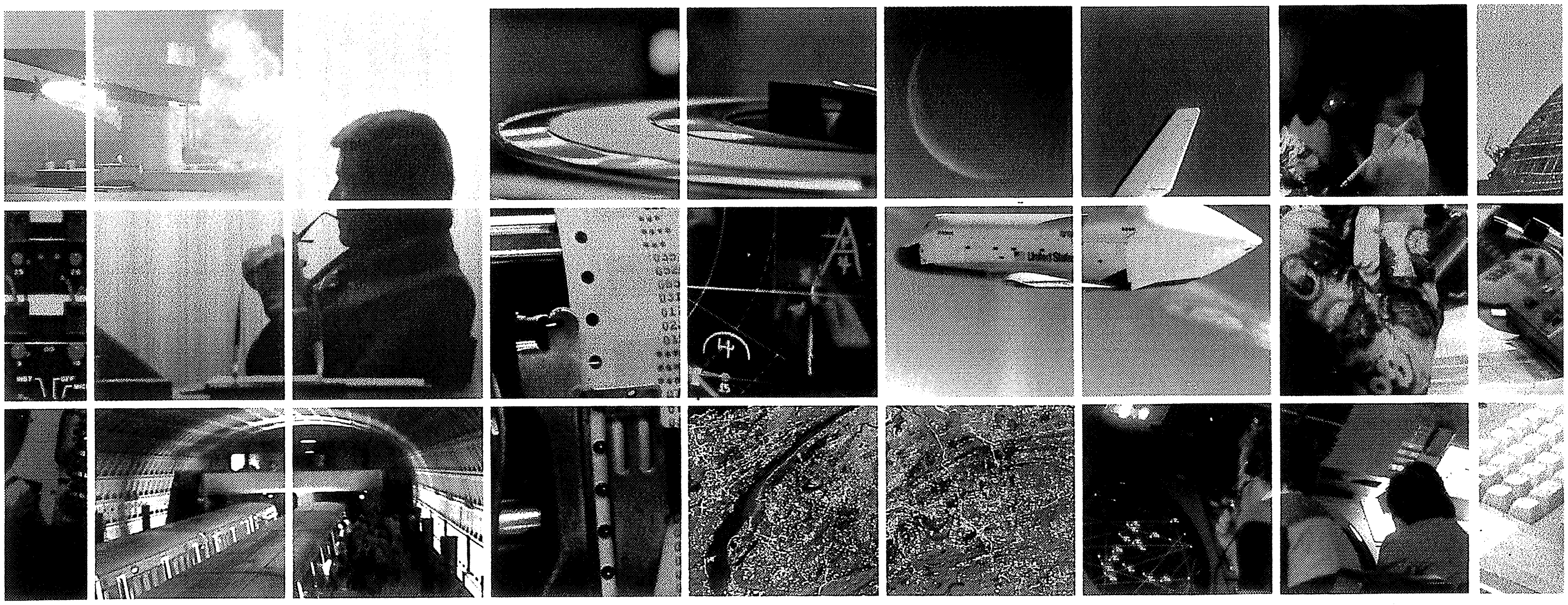

CSC
COMPUTER SCIENCES CORPORATION

[illegible]

GST079A
RR GSTS JJPL GSRM JOCC LESR GFAL
DE IPFN 244
BK
23/0900Z
FM G HIENDLMEIER
TO GSTS/G W OUSLEY CODE 404/DR J TRAINOR CODE 633
INFO JJPL/A BEERS/M ALAZARD/T ADAMSKY/R GREEN/E HAMPTON/ /J NASH/
/MOCC/E HERRINGTON/DR LEVY/W MELBURNE
GSRM/A OPP CODE SC/G STROBEL, CODE SL-4
JOCC/NOC
GFAL/TWX 9105251398 UNI OF IOWA, DR D GURNETT/R ANDERSON,DEP OF PHYS
GFAL/TWX 290178 UNI OF MINNESOTA, DR P KELLOGG, SCHOOL OF PHYS/ASTR.
LESR/K HEFTMAN ESOC DARMSTADT, WEST.-GERMANY
DLD 0043-68489 UNI OF ROMA/PROF DR E MARIANI, FRASCATI ROMA
952501 TU BRAUNSCEWEIG/DR G MUSMANN I.G.G./DR G DEHMEL INST F NACHRT
292979 UNI KIEL/H KUNOW INST F REINE U ANGEW KERNPHYSIK
965527 MPI LINDAU HARZ/DR E KEPPLER INST F AERONOMIE
MPI LINDAU HARZ/DR R SCHWENN/INST F AERONOMIE
461666 MPI HEIDELBERG/DR E GRUEN
461789 MPI HEIDELBERG/DR C LEINERT
885674 BMFT/K KAESMEIER/M OTTERBEIN
5287620 MBB MUENCHEN H SCHEIL
8874433 BPT DR W KEMPE/H PANITZ
245548 ERNO BREMEN/A KUTZER
DFVLR-GSOC/M GASS/H WUESTEN/W HARTL/P PIOTROWSKI/H WANKE/J KEHR/
FILE-HE/NOC SCHED/NOC PE/NOCC
DFVLR-I-553 DR H PORSCHE
DFVLR-WT-L DR J BECK

404/OUSLEY
~~600/TRAINOR~~
664/Helios
To Ousley as "Helios"
Please circulate:
NAL ✓
EKE ✓
NL ✓
PAS ✓
KAN ✓

SUBJECT: HELIOS-1, 18. PERIHELION

ON DOY 019 AT 2116Z HELIOS-1 PASSED THROUGH ITS 18 PERIHELION.
3328 DAYS AFTER LAUNCH THE SPACECRAFT IS NOW IN A VERY SHAKY HEALTH-CONDITION:

AFTER WE HAD BEEN ABLE TO RECOVER THE SPACECRAFT FROM ITS LAST -QUOTE- SLEEP PERIOD -UNQUOTE- ON DECEMBER 13, 1983 WE PROCEEDED WITH EXPERIMENT TURN-ON AND CONFIGURATION

DEC. 16, EXPERIMENT 1, PARTLY
DEC. 21, EXPERIMENT 1, COMPLETE
DEC. 23, EXPERIMENT 6,
DEC. 23, EXPERIMENT 2,
DEC. 25, EXPERIMENT 8,
DEC. 26, EXPERIMENT 7.
DEC. 28, EXPERIMENT 5A AND C,
DEC. 29, EXPERIMENT 5B,
1984,JAN. 07, EXPERIMENT 10.

ON JANUARY 08,84 THE SPACECRAFTS PRIME COMMAND RECEIVER FAILED AND COULD NOT BE BROUGHT BACK TO OPERATION. THE BACKUP RECEIVER WAS USED FROM THEN ON.

IN PREPARATION OF THE 18. PERIHELION
EXPERIMENTS 10, 8, 5A, B, C AND 7
WERE SHUT OFF ON JANUARY 11, 1984 IN ORDER TO AVOID A SYSTEM BREAKDOWN DUE TO UNDERVOLTAGE OF THE SOLAR GENERATOR CAUSED BY DEGENERATION AND HIGH TEMPERATURES.

ON JANUARY 17, THE DEEP SPACE TRACKING NETWORK WAS UNABLE TO REACH THE SPACRAFT UPLINK. THE DOWNLINK TELEMETRY SHOWED NO NEW ANOMALIES BUT THE ONBOARD RECEIVER DID NOT SEEM TO SEE TH UPLINK SIGNAL.

ON JANUARY 18, A 64METER ANTENNA WITH 40-65KW TRANSMIT POWER WAS USED TO TROUBLESHOOT THE PROBLEM. IT WAS POSSIBLE TO REACH AND COMMAND THE SPACECRAFT BUT THE LINK CALCULATION SHOWED 11 TO 15 DB ARE LOST SOMEWHERE ALONG THE LINE. THE TELEMETRY AGAIN SHOWED NO ANOMALIES.

WE HAVE NO EXPLANATION YET AS TO WHAT HAS HAPPEND AND THERE IS LITTLE HOPE THAT IT MIGHT REVERSE WITH DECREASING TEMPERATURES. WITHOUT

WE HAVE NO EXPLANATION
HOPE THAT IT MIGHT REVERSE WITH DECREASING TEMPERATURES. WITHOUT
COMMAND CAPABILITY OVER REGULAR DSN STATIONS AND BASICALLY ONLY ONE
64METER DISH WITH A HIGH POWER TRANSMITTER (DSS-43) OUR MEANS OF
ASSURING AN OPTIMUM DATA RETURN ARE SOMEWHAT LIMITED, ESPECIALLY IN
THE LIGHT OF A LIMITED TRACKING SUPPORT IN GENERAL
THE FOLLOWING PERIHEL DATA WERE RECEIVED ON DOY 020 OVER DSS-42 IN
AUSTRALIA: MAXIMUM MEASURED TEMPERATURE, HIGH GAIN ANTENNA 250 DEG.C
AVERAGE SOLAR GENERATOR TEMPERATURE 162 DEG.C
FORMAT 2 128 BPS CODED
EXPERIMENTS 1, 2 AND 6 IN OPERATION.

BEST REGARDS
GEORGE G. FIENDLMEIER

23/0923Z JAN 84 LPFN

#

The New Helios Data Base

Helios A

E0 41181	1074:34140615 1404:56669952	RATE
41182	1404:56669961 1608:30865488	
41183	1079:81601657 1140:57174032	PHA
41184	1140:57174041 1442:10888980	
41185	1442:10888987 1608:30883488	

Helios B

41187	1480:11028516 1610:09163567	RATE
41188	1480:11029073 1535:68580944	PHA
41189	1535:68580965 1588:38538832	

DCB

DRP	HADRSCTP	=	RECFM=F,	LRECL=80,	BLKSIZE=80
	HADRSCT1	=	RECFM=F,	0	=5540
	HADRSCT2		"	"	"
	HADRSCT3		"	"	"
	HADRSCT4		"	"	"
	HADRSLO6		"	"	7294
PHA SUM	HAPSCATP		"	80	=80
	HAPSCAT1		"	7272	=7272
	HAPSCAT2		"	7272	"
	HAPSCAT3		"	"	"
	HAPSCAT4		"	"	"
RATES SUM	HELARSP		RECFM=V	1344	1348
	HELARST		"	"	"

3.1 a HOUSEKEEPING DATA

<table>
<tr><th rowspan="2">HK TYPE</th><th colspan="15">BIT NUMBER</th></tr>
<tr><th>1-12</th><th>13-24</th><th>25-36</th><th>37</th><th>38</th><th>39</th><th>40</th><th>41</th><th>42</th><th>43</th><th>44</th><th>45</th><th>46</th><th>47</th><th>48</th></tr>
<tr><td>0</td><td>RATE (SLOW)</td><td>RATE (MED)</td><td>RATE (FAST)</td><td>0</td><td>0</td><td>A</td><td>2^0</td><td>2^1</td><td>2^2</td><td>0</td><td>0</td><td>0</td><td>P</td><td>0</td><td>0</td></tr>
<tr><td>1</td><td>THRESHOLD(S)</td><td>THRESHOLD(M)</td><td>THRESHOLD(F)</td><td>0</td><td>0</td><td>B</td><td></td><td></td><td></td><td>1</td><td>0</td><td>0</td><td>P</td><td>0</td><td>0</td></tr>
<tr><td>2</td><td colspan="3">PWR CALENDAR TIME (35 BITS)</td><td>0</td><td>0</td><td>AUTO</td><td></td><td></td><td></td><td>0</td><td>1</td><td>0</td><td>P</td><td>0</td><td>0</td></tr>
<tr><td>3</td><td colspan="3">ACCUM. A(18 BITS) ACCUM. B(18 BITS)</td><td>0</td><td>0</td><td>ROI</td><td></td><td></td><td></td><td>1</td><td>1</td><td>0</td><td>P</td><td>0</td><td>0</td></tr>
</table>

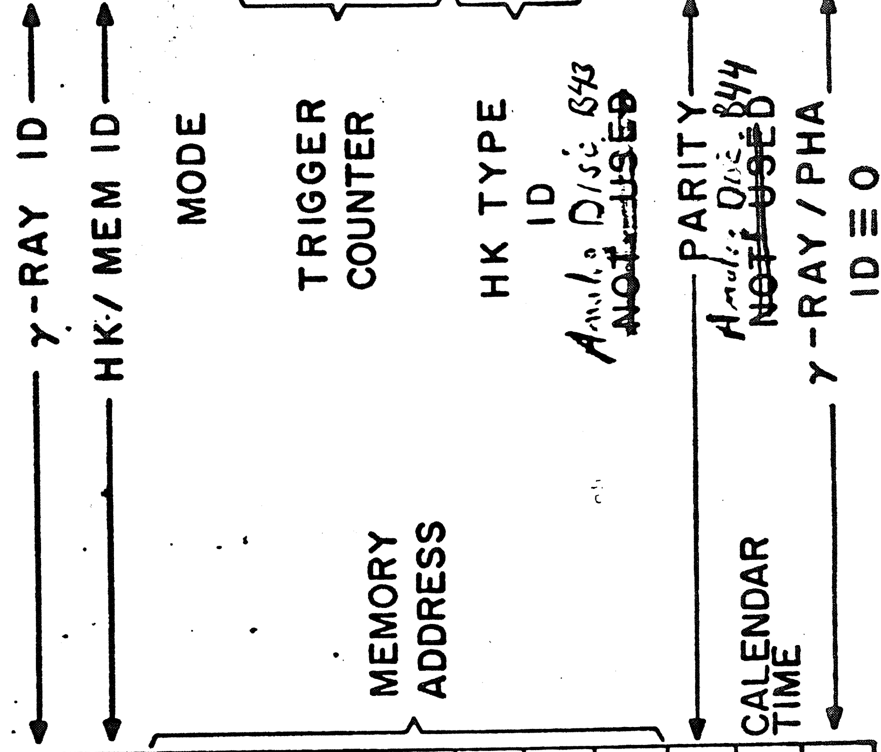

3.1 b MEMORY DATA

BIT NO.	1-12	13-24	25-36	37	38	39	40	41	42	43	44	45	46	47	48
	M (SLOW)	M (MED)	M (FAST)	0	1	2^2	2^3	2^4	2^5	2^6	2^7	2^8	P	T	0

FIGURE 3.1

Meeting 10/29/76 @ 10^{00} →

1) Still have to check w JPL give for dm 4-7 time

File will be broken @ day bdy ! (when?)

showed 119 as example of frame synch.

MDR dump of 119

they get br in every other frame

the br. changed before it was indicated. They should have had @ file br.

Back to 119 w 3 day file :

indic. 118-120 in header

[Is there really an operational pbk?
then files contain multiple br? (they are not ssupposed to)]

They only store low of clock
where does up part of clock come from?

They say bn form dm 7 is br at recording

(was dm 7 sorted sep. ??)

Closer examination of day 119 tape checkd m. d. t dump. & found discontinuity there also

The changes were in decoding SCE
& transfer of all the clock bits

~~Even~~
Remember they can do anything they want to with the space craft

Why don't they get the data in order
they get it in order of G.R.T.

Action items : 1) can we trust the clock ?
2) They will dump MDR
for S.C.E.T. to check time. If
in error call JPL

Us - memo to request correct sort of tape
this involves a program change on
their part.

Earl on day 119 clock updates ←

S.C.C. look as if forward dir

talk to JPL

[algorithm in FM3 clock is processed}

slowed out 2 FRAMES]

Don Meyer (MDR structure)

problems are on MDR itself

← this should be a rare problem.

can we get this fixed

Are these prob rel to multiday files

on d119 we have wrong day

Still has to fix day 117 time diff

odd/even

WE HAVE TO GET MEMO

Gerald,
for your infor.
Earl

400.2/Ousley
565/Beard

GST087C
RR JJPL GSTS JMOT JPRJ
DE LPFN 032
05/1714Z
FM J. KEHR — German
TO JJPL/A. BEERS
INFO GSTS/G. OUSLEY, CODE 440, /E. BEARD, CODE 565
JPRJ/CN05
JMOT/MOCC
JJPL/K. HEFTMANN/D. MEYER/L. CARTER/J. FANELLI/E. KELLY/D. SMITH/
JJPL/D. HUFF/A. BOUCK/N. AUSMAN
BLD H.J. PANITZ/G. HIENDLMEIER/HARTL/HOERNCHEN/PIOTROWSKI/GLAUER/
BLD CSFO/ FILE HE-A-3.

SUBJECT: HELIOS MEMORY READ-OUT PROBLEMS
REF.: TWX BEERS/KEHR 02/2227Z NOV. 76

THIS IS TO REPORT OUR FINDINGS ON THE MEMORY READ-OUT PROBLEMS WE HAVE ENCOUNTERED SO FAR:
AS A PREFACE I WOULD LIKE TO EXPLAIN THE TWO EFFECTS WHICH WE HAVE TO DEAL WITH:

1. WORD SYNCHRONOUS BITRATE CHANGE:
   IF A BITRATE CHANGE IS COMMANDED TOGETHER WITH A SWITCH INTO OR OUT OF DM4, WHICH WE NORMALLY DO, AT LOW BITRATES, THE BITRATE CHANGE IS EXECUTED WORD SYNCHRONOUS ALTHOUGH THE FRAME SYNCHRONOUS COMMAND IS USED BECAUSE OF A OVERWRITING CONDITION OF DM4 EXECUTING ALL BITRATE CHANGES WORD-SYNCHRONOUS (S/C DESIGN) WITH THE CONSEQUENCE THAT THIS MIGHT CAUSE SCRAMBLED DATA (EVEN-ODD FRAME INFORMATION IS EXCHANGED) WITH A APPROXIMATE PROBABILITY OF 500:1 (S/C DESIGN WEAKNESS).
   WE HAVE AGREED TO USE THE (ILLIGAL) DM4 MODE TO COVER GAPS.

   < BR can change anyplace in frame

   THE SCRAMBLED DATA MODE WILL SYCHRONIZE ITSELF AUTOMATICALLY WITH THE BEGIN OF THE NEXT MAINFRAME.

   check this?

   208 minor f

   THIS EFFECT SHOWS ALSO UP IF THIS DATA IS READ OUT OF THE MEMORY, IF IT HAPPENS GOING INTO DM4.

MORE

get straight answer on clock + Duff · Dec 4/7

This of FM3
They will not fix.

is there a way to fix it?
does it happen in 5FM
will somebody fix it

[illegible]

[illegible] 19 [illegible]

COMMUNICATIONS CENTER
GSFC

GST108A
RR JJPL GSTS JMOT JPRJ
DE LPFN 034
03/1714Z

PAGE WO

2. A READ-OUT FOR HE-A WOULD NOT REQUIREIA RESET-OF-MEMORE-ADDRESS COMMAND BEFORE THE START OF A READ-OUT.
A READ-OUT FOR HE-B REQUIRES A RESET COMMAND (OTHERWIS TPE READ-OUT IS NOT USEABLE).

STATUS OF OUR INVESTIGATIONS:

```
S/C 91 289/23:23 - 2.:28Z BAD REALTIME        DM4 WS B/R CHANGE
S/C 91  300/08:08 - ...... BAD REALTIME        DM4 WS B/R CHANGE
S/C 91  300/23:06 -  ......?-$ 4/0             FOR ONE MAINFRAME
                                   R/O OF BAD DM4 DATA OF DAY 300 ABOVE
S/C 91  302/05:28 - 06:00  BAD R/O OF FM6 (NO 233-RMEM)
S/C 91 304/01:00 - .....  BAD R/O          NOT JET INVESTIGATED
S/C 91  306/07:04 - 07:13  BAD R/O OF FM6 (NO DMO BEFORE R/O)
S/C 91  307/10:08 - 10:26 GOOD R/O OF FM3, BAD R/O OF FM6
                           THE MAD FM6 DATA OF DAY 306 WERE NOT
                           OVDRWRITTEN COMPLETELY.
S/C 90  307/0354  - 0358Z  BAD R/O OF FM6 (NOT DMO BEFORE R/O)
```

SUMMARY:

1. THE R/O OF FM6
S/C 91 DAY 302, 306
S/C 90 DAY 307
ARE NOT USEABLE DUE TO OPERATIONAL ERRORS. THE OTHER OCCURRENCES ARE DUE TO THE S/C DESIGN.

2. THE S/C MEMORY IS O.K.

CONCEQUENCES:

1. SPECIAL CARE WILL BE GIVEN TO THE MEMORY READ-OUT PROCEDURES

2. SINCE WE ARENNOW AT HIGHER BITRATES WE WILL TRY TO REDUCE THE ODDS FOR SCRAMBLED DATA BY PERFORMING BITRATE CHANGES IN DMO BEFORE WE GO INTO DM4.

THANK YOU FOR YOUR ALLERT SUPPZRT.

BEST REGARDS,
J. KEHR
END OF MESSAGE

03/1724Z NOV 76 LPFN

Gerald, for your information 11/3/76

Earl

400.8/Ousley
565/Beard

GST132C
RR LPFN GSTS JPRJ JMOT
DE JJPL 077A
02/2225Z
BY A BEERS
TO LPFN/J KEHR/PIOTROWSKI/K BERNHARDT
INFO LPFN/H PANITZ/G HIENDLMEIER/NOCC/CSFO/F UNZ-BPT
GSTS/G OUSLEY CODE 440/E BEARD CODE 565
JPRJ/OMOS
JMOT/NOCC
BLD/K HEFTMAN/D MEYER/K CARTER/J FANELLI/E KELLY/D SMITH/D HUFF/
A BOUCK/W AUSMAN

SUBJECT: HELIOS MEMORY READOUT PROBLEMS.

SINCE THE HELIOS - 2 MEMORY READOUT (MRO) PROBLEM ON DOY 289 WAS DETECTED (IN NON-REAL TIME), ADDITIONAL OCCURRANCES OF BAD MRO DATA HAVE BEEN NOTED. ONE OF THESE HAS BEEN DOCUMENTED AND DUMPS ARE ON THEIR WAY TO YOU. WE ARE VIEWING THEM WITH INCREASING ALARM, ESPECIALLY SINCE TWO PROBLEMS HAVE OCCURRED DURING HELIOS I DUMPS (ONE A RECONNIZABLE PROCEDURAL ERROR). WE HAVE RESEARCHED THE DATA FROM DOY 302 UNTIL THE PRESENT (307/1900Z) AND FIND THE FOLLOWING CONDITIONS OF MRO DATA:

S/C 91	302/0008-0012Z	GOOD
S/C 91	302/0528-0600Z	BAD
S/C 90	302/1855-1930Z	GOOD
S/C 91	303/0015-0200Z	GOOD
S/C 90	304/0100-....Z	BAD: BM CHANGE DURING MRO (ILLEGAL)
S/C 91	304/2256-2301Z	GOOD
S/C 90	304/2339-2355Z	GOOD
S/C 91	305/2306-2310Z	GOOD
S/C 91	306/0704-0713Z	BAD
S/C 90	307/0004-0021Z	GOOD
S/C 90	307/0354-0358Z	BAD

NOTE THAT THE FIXED DATA APPEARED TO BE IN REVERSE BLOCK LOCATIONS (EVEN VS. ODD NUMBERS) FOR THE PROBLEM ON DOY 289, BUT IN EACH SUBSEQUENT PROBLEM FIXED DATA ARE VARYING WITH NO DETECTABLE PATTERN (EXCEPT, OF COURSE, FOR THE HE-1 BM CHANGE PROBLEM).

IN VIEW OF THESE ANOMALIES, WE REQUEST A NETCON TOMORROW (WEDNESDAY, NOV 3) AT 1530Z TO EXPLORE POSSIBLE CAUSES/FIXES. WE REQUEST KEHR/PIOTROWSKI/BERNHARDT (OR THEIR REPS) AT YOUR END. WE WILL SUPPORT WITH FANELLI/KELLY/BEERS (MINIMUM). SHOULD YOU HAVE ANY REQUESTS FOR DUMPS OR OTHER SPECIAL SUPPORT, PLEASE HAVE THEM READY AT THAT TIME. WE WILL INITIAT THE CALL.

THANKS AND BEST REGARDS,
A BEERS

02/2227Z NOV 76 JJPL

March 4, 1977

MEMORANDUM FOR THE RECORD

TO: G. Muckel

FROM: G. Marandino

SUBJECT: Helios Data Processing Status

This is just to confirm the situation as it stands as of the telephone calls to IPD last month.

With respect to Helios-B only, we expect re-do tapes for all data processed before June 8, 1976.

With respect to both Helios A and B, we should have received re-do tapes of all days containing format 3 data which were recorded before 1976.80 (3/20/76). If any of this data was reprocessed before 11/17/76 and contains files of format 3 data spanning more than 1 day, it must be reprocessed again. All data recorded after 3/20/76 and processed before 11/17/76 containing format 3 data files spanning multiple days is subject to reprocessing.

All data processed after 11/17/76 is presumed to be satisfactory with respect to spacecraft clock, spacecraft event time in format 3, and only single day per file restriction.

We are in the process of checking our own records, and would appreciate a confirmatory check of IPD's records as soon as possible. We expect to resolve all the deviations from the desired situation in the immediate future.

GEM:kg

cc: E. Beard
J. Trainor
M. Van Hollebeke

FORMAT 1 POSSIBLE COMBINATIONS CONTAINED HEREIN

High Rate

~~1 FRAME = 144 WORDS ALWAYS~~

DATA = 6 BIT WORDS

V_{DIFF} & S_N = 8 BIT WORDS

V_D

EXP.	Blocklength (W) requ.	Blocklength (W) alloted	Words/ Frame	Subcom. Rate	
1	504	504	28	18	
2	70	72	9	8	
3	4	4	12	1/3	
4	32	32	16	2	
5a	32	32	16	2	BLOCK OF DATA IN 2 FRAMES
5b	7	7	7	1	
5c	38	40	20	2	
6	78	80	10	8	
7	6	6	6	1	
8	20	20	5	4	
9	53	72	1	72	
10	32	36	1	36	

144 Words

0 1 2 3 4 5 6 7 8 9 10 11 12 13

<table>
<tr><td colspan="4">SYNC/4</td><td colspan="4">3/4</td><td colspan="6">7/6</td><td colspan="10">1/10</td><td>24</td></tr>
<tr><td colspan="18">24 1/18</td><td colspan="6">6/6</td><td>24</td></tr>
<tr><td colspan="4">48 6/4</td><td colspan="4">3/4</td><td colspan="16">5a/16</td><td>24</td></tr>
<tr><td>72 F
M</td><td>73 I
D</td><td colspan="2">74 PT/2</td><td colspan="20">5c/20</td><td>24</td></tr>
<tr><td colspan="4">5b/4</td><td colspan="4">3/4</td><td colspan="3">5b/3</td><td colspan="5">8/5</td><td colspan="8">4/8</td><td>24</td></tr>
<tr><td colspan="8">4/8</td><td>9
1</td><td>10
1</td><td></td><td colspan="9">2/9</td><td colspan="4">ENG/4</td><td>24</td></tr>
</table>

Main Frame = 72 Frames

1 Main Frame of Eng.-Format in 2 Main Frames of Format 1

TABLE 2.5.5.4.1

FORMAT 2

Normal Rate

EXP	Blocklength (W) requ.	Blocklength (W) alloted	Words/ Frame	Subcom. Rate
1	432	432	48	9
2	70	72	12	6
3	4	4	12	1/3
4	32	32	4	8
5a	32	32	4	8
5b	4	4	4	1
5c	40	40	5	8
6	78	78	13	6
7	6	6	12	1/2
8	20	20	5	4
9	56	72	2	36
10	32	36	6	6

144 Words

0 8

SYNC/4	3/4	7/6	1/10				24
1/24							24
1/4	3/4	5a/4	5c/5	5b/4	9/2		24
F M	I D	TM/2	4/4	80 7/6	8/5	10/5	24
10 1	1/3	3/4	1/7	6/9			24
5/4	2/12	ENG/8					24

Main Frame = 72 Frames

1 Main Frame of Eng.-Format in 1 Main Frame of Format 2

TABLE 2.5.5.4.2

FORMAT 3
Reduced Rate

EXP	Blocklength (W) requ.	alloted	Words/ Frame	Subcom. Rate
1	432	432	24	18
2	70	72	9	8
3	4	4	12	1/3
4	32	32	4	8
5a	32	32	8	4
5b	7	7	7	1
5c	40	40	5	8
6	78	84	14	6
7	6	6	12	1/2
8	20	20	10	2
9	56	56	7	8
10	32	36	6	6

144 Words

<table>
<tr><td colspan="4">SYNC/4</td><td>3/4</td><td>7/6</td><td colspan="2">1/10</td><td>24</td></tr>
<tr><td colspan="6">1/14</td><td colspan="2">6/10</td><td>24</td></tr>
<tr><td colspan="4">6/4</td><td>3/4</td><td>10/6</td><td colspan="2">8/10</td><td>24</td></tr>
<tr><td>F
M</td><td>I
D</td><td colspan="2">TI/2</td><td>4/4</td><td>7/6</td><td>5c/3</td><td>5b/7</td><td>24</td></tr>
<tr><td></td><td colspan="2">5c/2</td><td></td><td>3/4</td><td colspan="2">2/9</td><td>9/7</td><td>24</td></tr>
<tr><td colspan="5">5a/8</td><td colspan="3">ENG/16</td><td>24</td></tr>
</table>

Main Frame = 72 Frames

2 Main Frame of Eng.-Format in 1 Main Frame of Format 3

TABLE 2.5.5.4.3

FORMAT 4 ENGINEERING

4 x 144 WORD

C	B	D	A	
SYNC/4 2/4 DS	C3 DP C2 DP D2/3 DP C4/3 DS	C4/2 DS ▨ DS C4 DS ▨ DP D2 DP	8 DP 2 DS	24
3 DS 4/3 DS 5B/3 DS ▨ DS	5A/2 DS A3/4 DS C2/2 DS	C3/6 AS	A2/2 DS	24
10/3 AS 1/5 AS	1/4 DS 1/4 AS	C2/6 AS		24
F I I D TI/2 10/4 AS	C3/3 AS C2/4 AR C2 AS	C2/6 AS		24
10 AS 2/3 AS 3/2 AS D2/2 AS	D2/2 AS P2/6 AS	C2/2 AS A2/4 AS		24
4/4 AS 8/2 AS 5A/2 AS	5A AS ▨ AS A2/2 AS A3/3 AS	C4/4 AS C4 AS A2 AS		24
SYNC/4 5B DS A2/3 DS		C4/3 AS A2 AS P2 DP C4 DP		24
A2/3 DS 6 DS 7 DS 9/2 DS 10 DS		7/6 AS		24
6/8 AS		7/6 AS		24
F I D TI/2 6/4 AS	Analog	7/2 AS D2/4 AS		24
AS ▨ AS 9/5 AS		D2/6 AS		24
9/8 AS		D2/6 AS		24
SYNC/4		D2/6 AS		24
		D2/6 AS		24
		D2/6 AS		24
F N I D TI/2		D2/6 AS		24
		D2/6 AS		24
		D2/6 AS		24
SYNC/4		D2/6 AS		24
		D2/6 AS		24
		D2/6 AS		24
F N I D TI/2		D2/6 AS		24
		D2/6 AS		24
		D2/6 AS		24

TABLE 2.5.5.4.4

TABLE 2.4.5.5.5

FORMAT 5

Very High Rate

EXP	Blocklength (W) requ.	alloted	Words/ Frame	Subcom. Rate
1	504	504	14	36
2S	4	4	8	1/2
3S	4	4	16	1/4
4S	1	1	1	1
4aS	3	3	36	1/12
4bS	12	12	4	3
5a	32	32	8	4
5bS	2	2	24	1/2
5c	40	40	10	4
6	78	90	5	18
7	6	6	3	2
8	20	24	2	12
9	56	72	1	72
10	32	36	1	36

144 Words

<table>
<tr><td colspan="4">SYNC/4</td><td>5bS/2</td><td>4aS/3</td><td>5a</td><td>3S/2</td><td>12</td></tr>
<tr><td colspan="2">3S/2</td><td colspan="2">1/2</td><td>"</td><td>"</td><td colspan="2">5c/3</td><td>12</td></tr>
<tr><td>5c</td><td colspan="2">1/2</td><td>5a</td><td>"</td><td>"</td><td colspan="2">7/3</td><td>12</td></tr>
<tr><td colspan="4">2S/4</td><td>"</td><td>"</td><td>5a</td><td>3S/2</td><td>12</td></tr>
<tr><td colspan="2">3S/2</td><td colspan="2">1/2</td><td>"</td><td>"</td><td colspan="2">4bS/3</td><td>12</td></tr>
<tr><td>4bS</td><td colspan="2">1/2</td><td>5a</td><td>"</td><td>"</td><td colspan="2">1/3</td><td>12</td></tr>
<tr><td>FN</td><td>ID</td><td colspan="2">TI/2</td><td>"</td><td>"</td><td>5a</td><td>3S/2</td><td>12</td></tr>
<tr><td colspan="2">3S/2</td><td colspan="2">8/2</td><td>"</td><td>"</td><td colspan="2">5c/3</td><td>12</td></tr>
<tr><td>5c</td><td colspan="2">6/2</td><td>5a</td><td>"</td><td>"</td><td colspan="2">6/3</td><td>12</td></tr>
<tr><td colspan="4">2S/4</td><td>"</td><td>"</td><td>5a</td><td>3S/2</td><td>12</td></tr>
<tr><td colspan="2">3S/2</td><td>9</td><td>10</td><td>"</td><td>"</td><td colspan="2">1/3</td><td>12</td></tr>
<tr><td colspan="2">5c/2</td><td></td><td>5a</td><td>"</td><td>"</td><td>4S</td><td>ENG/2</td><td>12</td></tr>
</table>

Main Frame = 72 Frames

1 Main Frame of Eng.-Format in 4 Main Frames of Format 5

FORMAT 6

EXP	Blocklength	Words/Frame	Subcom. Rate
2S	4	8	1/2
2A	1	1	1
3S	4	16	1/4
4aS	3	48	1/16
4bS	12	12	1
4S	1	1	1
5aS	2	16	1/8
5bS	2	32	1/16
5E	1	1	1

144 Words

SYNC/4	5bS/2	4aS/3	5aS/2	4bS/2	5bS/2	4aS/3	18
3S/4	"	"	"	4bS/2	"	"	18
2S/4	"	"	"	4bS/2	"	"	18
3S/4	"	"	"	2A 4S	"	"	18
FN ID TI/2	"	"	"	4bS/2	"	"	18
3S/4	"	"	"	4bS/2	"	"	18
2S/4	"	"	"	4bS/2	"	"	18
3S/4	"	"	"	5E	"	"	18

TABLE 2.4.5.5.6

DISTRIBUTION MODES (DM)	FORMAT MODES (FM)	BITRATE MODES (BM) 3	4	5	6	7	8	9	10	11	12
DMO Real Time Transmission	1							x	x	x	
	2				x	x	x	x			
	3	x	x	x	x						
	4	x	x	x	x	x	x	x	x	x	x
	5									x	x
DM 1 Real Time Transmission with format 6 storage at 4096 bps	1							x	x	x	
	2				x	x	x	x			
	3	x	x	x	x						
	4	x	x	x	x	x	x	x	x	x	x
DM 2 Real Time Transmission with format 6 storage at 8192 bps	1							x	x	x	
	2				x	x	x	x			
	3	x	x	x	x						
	4	x	x	x	x	x	x	x	x	x	x
DM 3 Real Time Transmission with format 6 storage at 16384 bps	1							x	x	x	
	2				x	x	x	x			
	3	x	x	x	x						
	4	x	x	x	x	x	x	x	x	x	x
DM 4, F4 XMIT/STORAGE,SEQ+	1 2 3 4					x ← [illegible] pro. minor frame					
DM 5, F3 XMIT/STORAGE,SEQ+	3 5	x	O	O	O	O	O	O	O	O	O
			impossible modes								
DM 7 Memory readout (data is formatted per FM and BM selected but not stored or transmitted.	1							x	x	x	
	2				x	x	x	x			
	3	x	x	x	x						
	4	x	x	x	x	x	x	x	x	x	x
	5									x	x

+SEQ. This means that the number "n" contained in the sequencer register is in effect for the stored data. Prior to mode entry "n" should be loaded in the sequencer register to determine number of mainframes deleted between stored mainframes. "n" may be any number between 0 and 77 octal(0 and 63 decimal).

Table .:2.5.5.13.4 DATA HANDLING MODES

Distribution Mode	Data Conditioning for Transmission		Data Conditioning for Storage	
	Format	Bitrate (bps)	Format	Bitrate (bps)
Real time without memory read-in DM-0	FM1 high rate (1) FM2 normal rate (2) FM3 reduced rate (3) FM4 engineering (4) FM5 very high rate (5)	512-2048 64 -512 8- 64 8-4096 4096		
Real time with simultaneous memory read-in DM-4	engineering (4)	128	engineering (4)	128
Real time with shock data read-in DM-2 ?	high rate (1) normal rate (2) reduced rate (3) engineering (4)	512-2048 64- 512 8- 64 8-4096	shock (6) shock (6) shock (6)	4096 DM-1 8192 DM-2 16384 DM-3
Blackout Mode DM6 Resets → DM-5	reduced rate (3)	8	reduced rate (3)	see section 3.1.1.3.1 (5)
Stored data transmission DM-7	reduced rate (3) engineering (4) shock (6)	8-4096 8-4096 8-4096		

Fig. 2 Modes for Telemetry Operation

TELECOMMANDS (EM ONLY); 400 - 777

600 - 677 Format (FM) and Distribution (DM) modes

$6X_2X_1$, X_2 = DM
X_1 = FM

DM 0 real - time
DM 1 real-time/shock: 4 kbps
DM 2 " " /shock: 8 kbps
DM 3 " " /shock: 16 kbps
DM 4 launch (eng. 128 kbps)
DM 5 blackout
DM 6 reset blackout
DM 7 memory dump

FM1 Science, high
2 " , normal
3 " , low
4 Engineering
5 Science, very high

500 - 577 Sequencer for DM4 and DM5

$5X_2X_1$; X_2X_1 = mainframes not stored in octal

400 - 477 Bitrate (BM)

$4X_2X_1$

	Bitrate	X_2X_1 (no flag$^+$)	X_2X_1 (flag$^+$)
BM3	8 bps	03	23
" 4	16 "	04	24
" 5	32 "	05	25
" 6	64 "	06	26
" 7	128 "	07	27
" 8	256 "	10	30
" 9	512 "	11	31
"10	1024 "	12	32
"11	2048 "	13	33
"12	4096 "	14	34

+) If flag is used, execution will wait until a DM/FM execution.

700 - 777 Status Register

$7X_2X_1$; X_2 (octal) = X6, X1, BY (binary)
X_1 (octal) = SP, CM, OC (binary)

function	0/1
X6	not used
X1	N/R encoder
BY	bypass/convolutional code
SP	N/R sector pulse generator
CM	N/R convolutional coder, modulator
OC	N/R oscillator and timing

+ N/R means normal is 0/Redundant is 1

Bit No.	0	1	2	3	4	5	6	7	8	9	10	11	12	13	14
Bit status	0	1	1	1	0	0	0	1	i_8	$\bar{i}_8$	i_7	$\bar{i}_7$	i_6	$\bar{i}_6$	i_5

Bit No.	15	16	17	18	19	20	21	22	23	24	25	26	27	28	29
Bit status	$\bar{i}_5$	i_4	$\bar{i}_4$	i_3	$\bar{i}_3$	i_2	$\bar{i}_2$	i_1	$\bar{i}_1$	i_0	$\bar{i}_0$	a	$\bar{a}$	p	$\bar{p}$

Bit No.	30	31	32	33	34	35	36	37	38	39	40	41	42	43	44
Bit status	0	1	1	1	0	0	0	1	i_8	$\bar{i}_8$	i_7	$\bar{i}_7$	i_6	$\bar{i}_6$	i_5

Bit No.	45	46	47	48	49	50	51	52	53	54	55	56	57	58	59
Bit status	$\bar{i}_5$	i_4	$\bar{i}_4$	i_3	$\bar{i}_3$	i_2	$\bar{i}_2$	i_1	$\bar{i}_1$	i_0	$\bar{i}_0$	a	$\bar{a}$	p	$\bar{p}$

Bit No	0	1	2	3	4	5	6	7	8	9	10	11	12	13	14
Bit status	0	1	1	1	0	0	0	1	following command						

Table 1-1: Command format

Bit	i_8	i_7	i_6	i_5	i_4	i_3	i_2	i_1	i_0
Bit value	2^8	2^7	2^6	2^5	2^4	2^3	2^2	2^1	2^0

Table 1-2: Bit assignment of command word in command format

Word No.	0								1							
Bit No.	0	1	2	3	4	5	6	7	0	1	2	3	4	5	6	7
Bit status	1	0	1	1	0	1	0	0	1	1	1	0	1	1	0	0

Word No.	2								3							
Bit No.	0	1	2	3	4	5	6	7	0	1	2	3	4	5	6	7
Bit status	0	1	1	1	1	1	0	0	1	1	0	0	0	0	0	0

Table 1-3: Bit status of 32 bit synchronization word SYNC

Format Mode	Mode Bit No. F2	F1	F0	Transmitted in Format
FM1	0	0	1	1
FM2	0	1	0	2
FM3	0	1	1	3
FM4	1	0	0	4
FM5	1	0	1	5
-	1	1	0	6

Table 1-1: Coding of format mode

Word No.		73	
Bit No.	1	2	3
Mode Bit No.	F2	F1	F0

Table 1-2: Bit assignment of format mode.

	Distribution Mode	Mode Bit No. D2	D1	D0
	DM0	0	0	0
	DM1	0	0	1
	DM2	0	1	0
	DM3	0	1	1
Accelerated SubCom	DM4	1	0	0
Memory Dump	DM5	1	0	1
Blackout	DM7	1	1	1

Table 3-1: Coding of distribution mode.

Frame No.	0, 2, ... 70			
Word No.	73			
Bit No.	4	5	6	7
Mode Bit	DB *	D2	D1	D0

The DB bit is a "1" if DM5 has been commanded but not yet executed.

Table 3-2: Bit assignment of distribution mode.

Frame number	Bit value								
	144	72	36	18	9	8	4	2	1
0	0	0	0	0	0	0	0	0	0
1	0	0	0	0	0	0	0	0	1
.				.					
.				.					
.				.					
8	0	0	0	0	0	1	0	0	0
9	0	0	0	0	1	0	0	0	0
.				.					
.				.					
.				.					
287	1	1	1	1	1	1	0	0	0

Table 1-5: Coding of frame number FN

Word No.	72								73
Bit No.	0	1	2	3	4	5	6	7	0
Bit value	144	72	36	18	9	8	4	2	1

Table 1-4: Bit assignment for frame number FN

Bitrate Mode	Mode Bit No.				Bitrate (bps)
	B3	B2	B1	B0	
BM3	0	0	1	1	8
BM4	0	1	0	0	16
BM5	0	1	0	1	32
BM6	0	1	1	0	64
BM7	0	1	1	1	128
BM8	1	0	0	0	256
BM9	1	0	0	1	512
BM10	1	0	1	1	1024
BM11	1	0	1	1	2048
BM12	1	1	0	0	4096

Table 4-1: Coding of bitrate mode

Frame No.	1, 3, ... 71			
Word No.	73			
Bit No.	4	5	6	7
Mode Bit No.	B3	B2	B1	B0

Table 4-2: Bit assignment of bitrate mode.

3.1.1.3.8.1 Timing Word for Format 1 to 5

The time which is represented by the number in the binary counter must be sampled in the beginning of each second frame of format 1 - 5 beginning with frame No. 0 with each second frame pulse FP1. This sampled mission time must be transmitted in format 1 - 5 as shown in table 8-1.

Frame No.	0,2, ...70	0,2, ...70
Word No.	74	75
Bit No.	1 2 3 4 5 6 7	0 1 2 3 4 5 6 7
Bit value/T	2^{25} to 2^{19}	2^{18} to 2^{11}

Frame No.	1,3, ...71	1,3, ...71
Word No.	74	75
Bit No.	0 1 2 3 4 5 6 7	0 1 2 3 4 5 6 7
Bit value/T	2^{10} to 2^{3}	2^{2} to 2^{-5}

Table 8-1: Bit assignment of timing words in format 1 to 5

3.1.1.3.8.2 Timing Word for Format 6

The time which is represented by the number in the binary counter must be sampled in the beginning of each frame of format 6 with the frame pulse FP6. This sampled mission time must be transmitted in format 6 as shown in table 8-2.

Word No.	74	75
Bit No.	0 1 2 3 4 5 6 7	0 1 2 3 4 5 6 7
Bit value/T	2^{10} to 2^{3}	2^{2} to 2^{-5}

Table 8-2: Bit assignment of timing words in format 6

PHA Tape Logical Record Format

Displacement	Type	Description
0	I*4	Time of day (MS) for first page contained in record
4	I*4	Time of day (MS) for page which is expected to immediately follow the last page in this record
8	I*2	Day (RMJD) for first page contained in record
10	I*2	Day (RMJD) for page which is expected to immediately follow the last page in this record
12	I*4	Round Trip Light Time
16	I*4	Spacecraft Clock
20	I*2	Absolute File Number
22	I*2	Time Correction Flag
24	I*2	Ratio of PHA blocks to RATES blocks
26	I*2	Bit Rate (8, 16, 32, 64, 128, 256, 512, 1024, 2048, 4096)
28	I*2	Format (1, 2, 3, 5)
30	I*2	Frame Counter Correction
32	I*2	Data Type
34	I*2	Data Quality
36		All the subcom data associated with the first page of data contained in the record. Refer to Tables 1 and 2 for a description of the subcom data for the two format groups.
84 (128)	I*4	All the rates data associated with the first page of data contained in PHA record. The rates data associated with each page appear in eight consecutive words, as follows:

Displacement	Type	Description
		(1) HET RATE R1 - (A2K1 + A1CI)B CIII (2) HET RATE R1 - (A2K1 + A1CI)B CIII (3) HET RATE R2A - A1 $\overline{A2}$ B CIII (4) HET RATE R2B - A1 BK2 $\overline{CIII}$ (5) HET RATE R3A - A2 B CII (6) LET RATE R11A - DI DII $\overline{\overline{F}}$ (7) LET RATE R11B - DI DII Σ D $\overline{\overline{F}}$ (8) Computed HET RATE R1 = (R6B + R7A + R7B + R8A + R8B) All rates which fail the trend check will be indicated by a negative rate value. Whenever a rate with a value of zero fails the trend check, it will be set to the value -21000000. Padded rates will be indicated by the value -20000000.
	I*2	All the PHA data associated with the first page of data contained in the PHA record. Each PHA entry, comprised of a HET and LET event, has a unique time associated with it and appears in three consecutive words, as follows: 0(MSB)..........................31(LSB) (1) HET - 1 HET - 2 (2) HET - 3 LET - 1 (3) LET - 2 LET - 3 Padded/missing PHA data is indicated by a negative one in the PHA entry. There is a varying number of PHA readouts per page depending upon the PHA/RATE block ratio: At a ratio of 5:1, there are 160 PHA readouts; at 3:1, there are 96 PHA readouts; and at 1:1, there are 32 PHA readouts. (See Table 3 for the structure of a PHA readout.)

Displacement	Type	Description
D_2 (D_2^1)		All the subcom, Rates, and PHA data for the second page of data contained in the record
D_3(D_3^1)		All the subcom, Rates, and PHA data for the third page of data contained in the record
D_4(D_4^1)		All the subcom, Rates, and PHA data for the fourth page of data contained in the record

Note: The first displacement is for data transmitted in formats 1, 2, or 3. The record displacement is for data transmitted in format 5. Actual displacements for page 2 - 4 are dependent upon bit rate and the PHA/RATES block ratio.

Table 1. PHA Tape

(Subcom data for format group 1 - formats 1, 2, 3)

Displacement	Type	Description
0	I*2	Spin Rate (in RPM)
2	I*2	HET (E7A) temperature
4	I*2	VLET1 (E7B1) temperature
6	I*2	VLET2 (E7B2) temperature
8	I*2	LET (E7C) temperature
10	I*2	detector mounting plate temp.
12	I*2	X-Ray detector temperature
14	I*2	thermal blanket support plate 1 temp.
16	I*2	thermal blanket support plate 2 temp.
18	I*2	electronics temperature
20	I*2	base plate temperature
22	I*2	+12 v monitor
24	I*2	+6 v digital monitor
26	I*2	+6 v analog monitor
28	I*2	+7.75 v monitor
30	I*2	+4.7 v monitor
32	I*2	base plate temperature (front)
34	I*2	Power status (1=on, 0=off)
36	L*1	X-Ray Window Clock
37	L*1	X-Ray Window Data
38	L*1	Internal Calibrator A
39	L*1	Internal Calibrator B
40	L*1	X-Ray high voltage
41	L*1	Sector synchronizer
42	L*1	Force blackout mode
43	L*1	X-Ray sector data mode
44	I*2	X-Ray command reg.
46	I*2	X-Ray XEQ. reg.

(12 words)

Table 2. PHA Tape

(Subcom Data for format group 2 - format 5)

Displacement	Type	Description
0 - 43	same as 0 - 43, Table 1, for sequence 1	
44 - 87	same as 0 - 43, Table 1, for sequence 2	
88 - 91	same as 44 - 47, Table 1	
(23 words)		

Table 3. Helios PHA Events

Halfword 1 METTAAAAAAAAAAAA
Halfword 2 BBBBBBBBBBBBCCCC
Halfword 3 CCCCCCCCRSSQPPN

Where:

M = 0, data is good
= 1, data is missing 1 padded
E = 0, LET event
= 1, HET event
TT = 00, $A1\overline{A2}BCIII$ (HET)/DIDII $\Sigma D \overline{F}$ (LET)
= 01, A2BCIII (HET)/DIDII $\overline{F}$ (LET)
= 10, (A2K1 + A1CI) $B\overline{CIII}$ (HET)/(No LET)
= 11, $A1BK2\overline{CIII}$ (HET)/(No LET)
R = 0, CII threshhold not exceeded
= 1, CII threshhold is exceeded
HET only
SSS = 0-7, sectors 0-7, respectively
Q = 0, PHA word 1 is the A amplitude
= 1, PHA word 1 is the CIII amplitude
HET only
PP = 0-3 priorities (HET)/0-1 priorities (LET)
N = 0, good event
= 1, null event

HAP TPL

RATES Tape Logical Record Format

Displacement	Type	Description
0	I*4	Time of day (MS) for first page contained in record
4	I*4	Time of day (MS) for page which is expected to immediately follow the last page in this record
8	I*2	Day (RMJD) for first page contained in record
10	I*2	Day (RMJD) for page which is expected to immediately follow the last page in this record
12	I*4	Round Trip Light Time
16	I*4	Spacecraft Clock
20	I*2	Absolute File Number
22	I*2	Time Correction Flag
24	I*2	Ratio of PHA blocks to RATES blocks
26	I*2	Bit Rate (8, 16, 32, 64, 128, 256, 512, 1024, 2048, 4096)
28	I*2	Format (1, 2, 3, 5)
30	I*2	Frame Counter Correction
32	I*2	Data Type
34	I*2	Data Quality
36		All the subcom data associated with the first page of data contained in the record. Refer to Tables 1 and 2 for a description of the subcom data for the two format groups.
92 (136)	I*4	All the rates data associated with the first page of data contained in record. Each page consists of 4 sets (2 sectored and 2 unsectored) of 32 and 20 rates respectively, which are uniquely identified by the corresponding rate sequence ID's appearing in the associated set of subcom data. The rates data associated with each page appears in 104 consecutive words, as follows: 1 - Sectored Rate (First Set) • • •

RATES Tape Logical Record Format (continued)

Displacement	Type	Description
		32 - Sectored Rate (First Set) 33 - Unsectored Rate (First Set) . . . 52 - Unsectored Rate (First Set) 53 - Sectored Rate (Second Set) . . . 84 - Sectored Rate (Second Set) 85 - Unsectored Rate (Second Set) . . . 104 - Unsectored Rate (Second Set)
		Refer to Table 3 to determine the rates data associated with each unsectored and sectored rate sequence ID.
564 (652)		All the subcom and Rates data for the second page of data contained in the record.
1036 (1168)		All the subcom and Rates data for the third page of data contained in the record.
1508 (1684)		All the subcom and Rates data for the fourth page of data contained in the record.

Note: The first displacement is for data transmitted in formats 1, 2, or 3. The second displacement is for data transmitted in format 5.

Table 1. RATES Tape

(Subcom data for format group 1 - formats 1, 2, 3)

Displacement	Type	Description
0	I*2	Spin Rate (in RPM)
2	I*2	HET (E7A) temperature
4	I*2	VLET1 (E7B1) temperature
6	I*2	VLET2 (E7B2) temperature
8	I*2	LET (E7C) temperature
10	I*2	detector mounting plate temp.
12	I*2	X-Ray detector temperature
14	I*2	thermal blanket support plate 1 temp.
16	I*2	thermal blanket support plate 2 temp.
18	I*2	electronics temperature
20	I*2	base plate temperature
22	I*2	+12 v monitor
24	I*2	+6 v digital monitor
26	I*2	+6 v analog monitor
28	I*2	+7.75 v monitor
30	I*2	+4.7 v monitor
32	I*2	base plate temperature (front)
34	I*2	Power status (1=on, 0=off)
36	L*1	X-Ray Window Clock
37	L*1	X-Ray Window Data
38	L*1	Internal Calibrator A
39	L*1	Internal Calibrator B
40	L*1	X-Ray high voltage
41	L*1	Sector synchronizer
42	L*1	Force blackout mode
43	L*1	X-Ray sector data mode
44	I*2	X-Ray command reg.
46	I*2	X-Ray XEQ. reg.
48	I*2	Unsectored Rate Sequence ID (First Set)

Table 1. (continued)

Displacement	Type	Description
50	I*2	Sectored Rate Sequence ID (First Set)
52	I*2	Unsectored Rate Sequence ID (Second Set)
54	I*2	Sectored Rate Sequence ID (Second Set)

(14 words)

Table 2. RATES Tape

(Subcom data for format group 2 - format 5)

Displacement	Type	Description
0 - 43	(same as Table 1)	(same as Table 1)
44 - 87	(same as 0 - 43)	(same as 0 - 43)
88 - 99	(same as 44 -54)	(same as 44 - 54)
(25 words)		

Table 3. RATE Sequence ID

Unsectored	Sectored	Rate
xx	0	SR1A $\mathrm{A_1\overline{A}_2BCI\ \overline{CIII}}$ (1-8)
		SR2A $\mathrm{SI_5\ \overline{SII}\ \overline{SII}_a\ \overline{SIII}}$ (1-8)
		SR3A $\mathrm{SI_5\ \overline{SII}\ \overline{SII}_a\ \overline{SIII}}$ (1-8)
		SXRY Sectored X-Ray (1-8)
0	xx	R1 - $\mathrm{(A_2K_1 + A_1CI)\ B\overline{CIII}}$
		R2A - $\mathrm{A_1\overline{A}_2BCIII}$
		R3A - $\mathrm{A_2BCIII}$
		R4A - $\mathrm{A_2BK_2CI\ \overline{CII}}$
		R5A - $\mathrm{A_2BK_2CI\ CII\ \overline{CIII}}$
		R6A - $\mathrm{A_1\overline{A}_2B\overline{CI}}$
		R7A - $\mathrm{A_1\overline{A}_2BCI\ CII\ \overline{CIII}}$
		R8A - $\mathrm{A_2BK_1CI\ \overline{CII}}$
		R9A - $\mathrm{SI\ SII\ SII_a\ SIII}$
		R10A - $\mathrm{DI_1}$
		R11A - $\mathrm{DI\ DII\ \overline{F}}$
		R12A - $\mathrm{DI\ DII\ E_1\ \overline{F}}$
		R13A - $\mathrm{DI\ DII\ E_2\ \overline{F}}$
		R14A - DI
		R15A - $\mathrm{SI_1\ \overline{SII}\ \overline{SII}_a\ \overline{SIII}}$
		R16A - $\mathrm{SI\ SII\ \overline{SII}_a\ \overline{SIII}}$
		R17A - SI (VLET1)
		R18A - $\mathrm{SI_1\ \overline{SII}\ \overline{SII}_a\ \overline{SIII}}$
		R19A - $\mathrm{SI\ SII_1\ \overline{SII}_a\ \overline{SIII}}$
		R20 - USXR

Table 3. (continued)

Unsectored	Sectored	Rate
xx	1	SR1B - A_2 BK_1 $\overline{CIII}$ (1-8)
		SR2B - SI_6 $\overline{SII}$ $\overline{SII}_a$ $\overline{SIII}$ (1-8)
		SR3B - SI_6 $\overline{SII}$ $\overline{SII}_a$ $\overline{SIII}$ (1-8)
		SXRY - Sectored X-Ray (1-8)
1	xx	R1
		R2B - A_1 BK_2 $\overline{CIII}$
		R3B - A_2 BK_2 $\overline{CI}$
		R4B - A_1
		R5B - A_2
		R6B - A_1 $\overline{A}_2$ BCI $\overline{CII}$
		R7B - A_2 BK_1 $\overline{CI}$
		R8B - A_2 BK_1 CI CII $\overline{CIII}$
		R9B - SI SII SII_a SIII
		R10B - DI_2
		R11B - DI DII Σ D $\overline{F}$
		R12B - DI DII Σ DE_3 $\overline{F}$
		R13B - DI DII Σ DE_4 $\overline{F}$
		R14B - DII
		R15B - SI_2 $\overline{SII}$ $\overline{SII}_a$ $\overline{SIII}$
		R16B - SI SII_2 $\overline{SII}_a$ $\overline{SIII}$
		R17B - SII (VLET 1)
		R18B - SI_2 $\overline{SII}$ $\overline{SII}_a$ $\overline{SIII}$
		R19B - SI SII_2 $\overline{SII}_a$ $\overline{SIII}$
		R20

Table 3. (continued)

Unsectored	Sectored	Rate
xx	2	SR1C - DI DII $\overline{F}$ (1-8)
		SR2C - $SI_7\ \overline{SII}\ \overline{SII}_a\ \overline{SIII}$ (1-8)
		SR3C - $SI_7\ \overline{SII}\ \overline{SII}_a\ \overline{SIII}$ (1-8)
		SXRY - Sectored X-Ray (1-8)
2	xx	R1
		R2A - R9A
		R10C - DI_3
		R11A - R13A
		R14C - E_1
		R15C - $SI_3\ \overline{SII}\ \overline{SII}_a\ \overline{SIII}$
		R16C - SI $SII_3\ \overline{SII}_a\ \overline{SIII}$
		R17C - SII_a (VLET 1)
		R18C - $SI_3\ \overline{SII}\ \overline{SII}_a\ \overline{SIII}$
		R19C - SI $SII_3\ \overline{SII}_a\ \overline{SIII}$
		R20
xx	3	SR1D - DI DII E_1 F (1-8)
		SR2D - $SI_8\ \overline{SII}\ \overline{SII}_a\ \overline{SIII}$ (1-8)
		SR3D - $SI_8\ \overline{SII}\ \overline{SII}_a\overline{SIII}$ (1-8)
		SXRY - Sectored X-Ray (1-8)
3	xx	R1
		R2B - R9B
		R10D - DI_4
		R11B - R13B
		R14D - F
		R15D - $SI_4\ \overline{SII}\ \overline{SII}_a\ \overline{SIII}$

Table 3. (continued)

Unsectored	Sectored	Rate
		R16D - $SI\ SII_4\ \overline{SII}_a\ \overline{SIII}$
		R17D - SIII (VLET 1)
		R18D - $SI_4\ \overline{SII}\ \overline{SII}_a\ \overline{SIII}$
		R19D - $SI\ SII_4\ \overline{SII}_a\ \overline{SIII}$
		R20
xx	4	SR1A (1-8)
		SR2E - $\overline{SI}\ SII_5\ \overline{SII}_a\ \overline{SIII}$ (1-8)
		SR3E - $\overline{SI}\ SII_5\ \overline{SII}_a\ \overline{SIII}$ (1-8)
		SXRY - Sectored X-Ray (1-8)
4	xx	R1
		R2A - R9A
		R10E - DI_5
		R11A - R13A
		R14E - B
		R15A - R16A
		R17E - SI (VLET 2)
		R18A - R19A
		R20
xx	5	SR1B (1-8)
		SR2F - $\overline{SI}\ SII_6\ \overline{SII}_a\ \overline{SIII}$ (1-8)
		SR3F - $\overline{SI}\ SII_6\ \overline{SII}_a\ \overline{SIII}$ (1-8)
		SXRY - Sectored X-Ray (1-8)
5	xx	R1
		R2B - R9B
		R10F - DI_6
		R11B - R13B
		R14F - CI

Table 3. (continued)

Unsectored	Sectored	Rate	
		R15B - R16 B	
		R17F - SII (VLET 2)	
		R18B - R19B	
		R20	
xx	6	SR1C	(1-8)
		SR2G - $\overline{SI}\ SII_7\ \overline{SII}_a\ \overline{SIII}$	(1-8)
		SR3G - $\overline{SI}\ SII_7\ \overline{SII}_a\ \overline{SIII}$	(1-8)
		SXRY - Sectored X-Ray	(1-8)
6	xx	R1	
		R2A - R9A	
		R10G - DI_7	
		R11A - R13A	
		R14G - CII	
		R15C - R16C	
		R17G - SII_a (VLET 2)	
		R18C - R19C	
		R20	
xx	7	SR1D	(1-8)
		SR2H - $\overline{SI}\ SII_8\ \overline{SII}_a\ \overline{SIII}$	(1-8)
		SR3H - $\overline{SI}\ SII_8\ \overline{SII}_a\ \overline{SIII}$	(1-8)
		SXRY - Sectored X-Ray	(1-8)
7	xx	R1	
		R2B - R9B	
		R10H - DI_8	
		R11B - R13B	
		R14H - CIII	
		R15D - R16D	
		R17H - SIII (VLET 2)	
		R18D - R19D	
		R20	

Rates Processing With Heldrp

prepared by Ed Romich
at the request of Nand Lal

The Data

The data is presented to us on non labeled tapes which are processed by PLIBGEN onto labeled library tapes. (See LGEXECB in CRBE.LIB.ZBJHB for PLIBGEN proc). The tapes are read and processed by HELDRP (see DRPPROC and QLK in CRBE.LIB.ZBJHB for HELDRP proc). Each tape file contains records of 3744 bytes. The first record is the data label and the next several records contain data. A portion of a file is presented in figure 1 and the same portion formatted is presented in figure 2.

Line one is the label record. It consists of 3744 bytes most of which are zero. The first 92 bytes are printed as (92A1) format and fit the description in figure 3. The second line in figure 1&2 and the 3rd line in figure 2 are printed by the generating programs. The second data record begins with the EVT = 52890604. The record consists of 936 words in a 13 X 72 format. Each 13 word line is printed in figure 1&2 and satisfies the format in figure 4, 5 and 6.

Refering to figure 1 & 2 the time of the event for frame 0 was 52890604 milliseconds. The Greenich mean Time of the received signal at earth was 43323711 seconds. The frame number 0 and first half of the S/C clock form the next word. Frame 1 is necessary to complete the S/C clock which is ABC3BC07 for frame 0. The clock is a 31 bit clock with the left most bit always turned on. Thus the s/c clock is 2BC3BC07 at the time of the event. That is 734247943/32 = 22945248.22 seconds Each bit in the clock is 1/32 of a second. Word four or E in fig 1 contains 9 pieces of data as in fig 4 & 5. These are displayed separately in fig 2. In particular frame 0 is Distribution mode = 7 and data quality = 4 and the rest are zeros. F is the time for the telemetry signal to travel from the space craft to the earth. G, H and I form the two science words (there would only be one in format 1). The two science words have been expanded in fig 2 according to the format of table 1. with the rate words printed as integers and bit 37-48 of each word printed directly. In particular we see frame 0 contains line 0 and line 1. The unsectored rate sequence ID from line 1 is 5, and the sectored rate sequence ID from line 8 is also 5

The unsectored rate register R9 which is split between lines 1, 2 and 3 is 01010:01 1001 or 2531_8 or 1369_{10}. Each rate word is decompressed in LOG12, and there are tables available to compare the log word with the actual count.

The next 4½ words form the engineering words. These are unpacked in ENGDAT and are listed in fig 8. The last two bytes are the day.

```
  A       B   C D   E    F   G    H       I      J       K    L     M      N    O  P
7600301 TLM TLM 3 0008 76 283 144130 284 000000 6284 01 761116 286 10 01
      A               B            C         D          E           F         G          H
FILE #207 & RECORD #  2       HB013510    HBL018
    52890604       43323711      0       ABC3  0000003C  0009F82D  AA099090  03E1A209
    53034604       43341709      1       BC07  0000003C  0009F82B  9B0AC04D  B5A907FB
    53179354       43359707      2       ABC3  0000003C  0009F829  880F8063  E205777B
    53323354       43377704      3       E01F  0000003C  0009F826  07FA0007  FCAD07F0
    53467354       43395702      4       ABC4  0000003C  0009F824  F80A30AC  00A3F80A
    53611354       43413700      5       041F  0000003C  0009F822  B80A40A1  0FABF80A
    53755354       43431697      6       ABC4  0000003C  0009F81F  07FA60A2  00A7B00A
    53899354       43449695      7       281F  0000003C  0009F81D  B80A70A5  06AFB80A
    54043354       43467693      8       ABC4  0000003C  0009F81A  AA099090  03E1A209
    54187354       43485690      9       4C1F  0008003C  0009F818  9B0AC04D  B0C907FB
    54331354       43503688     10       ABC4  0008003C  0009F816  87097807  F205F809
    54475354       43521686     11       701F  0008003C  0009F813  A009A0AC  09CDB40F
    54619354       43539683     12       ABC4  0008003C  0009F811  F80A30AC  00A3F80A
    54763354       43557681     13       941F  0008003C  0009F80F  B80A40A1  0EABF80A
    54907354       43575679     14       ABC4  0008003C  0009F80C  07FA60A2  00A7B00A
    55051354       43593676     15       B81F  0008003C  0009F80A  B80A70A5  09AFB80A
    55195354       43611674     16       ABC4  0008003C  0009F808  9D088A8E  03E19748
    55339354       43629672     17       DC1F  0008003C  0009F805  8A29A83E  35E907FF
    55483354       43647670     18       ABC5  0010003C  0009F803  998A2053  B2056709
    55627354       43665667     19       001F  0010003C  0009F801  AC0A7007  F9ED07F0
    55771354       43683665     20       ABC5  0010003C  0009F7FE  F8093C9B  80C3F809
    55915354       43701662     21       241F  0010003C  0009F7FC  B8093C90  0ECB8809
```

```
           Q
007   101576100176
    I         J         K         L         M         N

C09589B1  FF000000  00000000  00000000  00000000  0000011B
80F805B9  FF3FAF00  00000000  00000000  00000000  0000011B
00F800B5  FF3FAF00  00000000  00000000  00000000  0000011B
7FF80ABD  FF3FAF00  00000000  00000000  00000000  0000011B
E0A206B3  FF3FAF00  00000000  00000000  00000000  0000011B
20A105BB  FF3FAF00  00000000  00000000  00000000  0000011B
A0A203B7  FF3FAF00  00000000  00000000  00000000  0000011B
50A107BF  FF3FAF00  00000000  00000000  00000000  0000011B
C09589D1  FF3FAF00  00000000  00000000  00000000  0000011B
0007F5D9  FF3FAF00  00000000  00000000  00000000  0000011B
08A402D5  FF3FAF33  00000000  00000000  00000000  0000011B
80B808DD  FF3FAF33  66787478  746B0000  00000000  0000011B
E0A203B3  FF3FAF33  66787478  746B0000  00000000  0000011B
20A104BB  FF3FAF33  66787478  746B7480  F2D6D4D3  0000011B
A0A201B7  FF3FAF33  66787478  746B7480  F2D6D4D3  EA76011B
50A105BF  FF3FAF33  66787478  746B7480  F2D6D4D3  EA76011B
C48331F1  FF3FAF33  66787478  746B7480  F2D6D4D3  EA76011B
80F804F9  FF3FAF33  66787478  746B7480  F2D6D4D3  EA76011B
D89B32F5  FF3FAF33  66787478  746B7480  F2D6D4D3  EA76011B
7FF808FD  FF3FAF33  66787478  746B7480  F2D6D4D3  EA76011B
549C87D3  FF3FAF33  7C7C7478  746B7480  F2D6D4D3  EA76011B
4091C4DB  FF3FAF33  7C7C7478  746B7480  F2D6D4D3  EA76011B
```

Figure 1

```
      A        B      C  D     E     F     G       H        I        J        K      L      M       N     O   P
   7600301 TLM TLM 3 0008 76 283 144130 284 000000 0284 01 761116 286 10 01
   TAPE HB0135  B   FILE C 10 HBL018 FILE# 207
A  HBL0** FILE     10 RECORD D   2    E          F          G        H        I          J
   52890604  43323711   0  ABC3  000000074  9F82D     2720     2448     2304  001111100001   0
                                                      2592     2496     2352  100110110001   1
   53034604  43341709   1  8C07  000000074  9F82B     2480     2752     1243  010110101001   2
                                                       127     2944     3968  010110111001   3
   53179354  43359707   2  ABC3  000000074  9F829     2944     3968     1598  001000000101   4
                                                      1911     2816     3968  000010110101   5
   53323354  43377704   3  E01F  000000074  9F826      127     2560      127  110010101101   6
                                                       127      127     3968  101010111101   7
   53467354  43395702   4  ABC4  000000074  9F824     3968     2608     2752  000010100011   8
                                                      3968     2784     2592  011010110011   9
   53611354  43413700   5  041F  000000074  9F822     2944     2624     2576  111110101011   10
                                                      3968     2592     2576  010110111011   11
   53755354  43431697   6  ABC4  000000074  9F81F      127     2656     2592  000010100111   12
                                                      2816     2720     2592  001110110111   13
   53899354  43449695   7  281F  000000074  9F81D     2944     2672     2640  011010101111   14
                                                      2944     2640     2576  011110111111   15
   54043354  43467693   8  ABC4  000000074  9F81A     2720     2448     2304  001111100001   0
                                                      2592     2496     2352  100111010001   1
   54187354  43485690   9  4C1F  000010074  9F818     2480     2752     1243  000011001001
                                                       127     2816      127  010111011001
```

```
              Q
007  101375100176
    K          L          M          N          O
FF000000   00000000   00000000   00000000   0000011B
FF3FAF00   00000000   00000000   00000000   0000011B
FF3FAF00   00000000   00000000   00000000   0000011B
FF3FAF00   00000000   00000000   00000000   0000011B
FF3FAF00   00000000   00000000   00000000   0000011B
FF3FAF00   00000000   00000000   00000000   0000011B
FF3FAF00   00000000   00000000   00000000   0000011B
FF3FAF00   00000000   00000000   00000000   0000011B
FF3FAF00   00000000   00000000   00000000   0000011B
FF3FAF00   00000000   00000000   00000000   0000011B
```

Figure 2

DEC 6 1973

HELIOS A
EDR
TELEMETRY LABEL
FORMAT

This label will preceed all files on the TLM EDR. The label will consist of 78 characters

A	1 - 7 + Space	International Code
B	9 -11 + Space	Tape Type (TLM or ORB)
C	13 -15 + Space	Data Type (TLM or CMD)
D	17 + Space	Format Number
E	19 -22 + Space	Bit Rate
F	24 -25 + Space	Year of Recording (last 2 digits)
G	27 -29 + Space	File Start Time (Day)
H	31 -36 + Space	File Start Time (HHMMSS)
I	38 -40 + Space	File Stop Time (DAY)
J	42 -47 + Space	File Stop Time (HHMMSS)
K	49 -52 + Space	Master Data Tape Number
L	54 -55 + Space	Master Data Tape File
M	57 -62 + Space	Date EDR generated (YYMMDD)
N	64 -66 + Space	EDR Run Number
O	68 -69 + Space	EDR File number
P	71 -72 + Space	EDR reel number
Q	74 -76	Experimenter ID
	77 78	Spares

Labels written on seven (7) track tape will be written in IBM BCD Format, odd parity.

Labels written on nine (9) track tape will be written in EBCDIC.

figure 3

bytes numbered left to right E1

DEC 9 197

IDATA(4,K)

HELIOS A
EDR
FRAME STATUS INDICATORS

S1 (Byte 1)

(4)

		Bits	word Bit #	position
GMT Time Correction Flag		1–0	6-7	3
Correct	0			
Corrected	1			
Uncorrectable	2			
Event Time Status Flag		3–2	4-5	2
Event time computed	0			
Computed but questionable	1			
Not computed	2			
Data Type		6–4	1-3	1
Real time	0			
Analog tape replay	5			
Digital tape replay	4			

S2 (Byte 2)

(7)

(8)

		Bits	word Bit #	position
Frame Counter Correction		2–0	13-15	6
Corrected	1			
Uncorrected	0			
Engineering Frame Number		5–3	10-12	5
Fill Data Present		6	9	4
Fill	1			
No fill	0			

S3 (Byte 3)

		Bits	word Bit #	position
Number of Bit Errors in S/C Sync Word		7–0	16-23	7

S4 (Byte 4)

		Bits	word Bit #	position
Data Quality		2–0 5-7	29-31	9
Data is Good	4			
Data is Suspect (SNR below minium requirement)	3			
Data is Suspect (errors in HSD block)	2			
Data is Suspect (SNR below minimum requirement and errors in HSD block	1			
Data is Bad (non synced, or deleted frame	0			
Distribution Mode		6–3 1-4	25-28	8

what is other bit in this byte #9

Note: Bits are numbered right to left within the byte (7-0)

figure 4

IDATA(4,K)

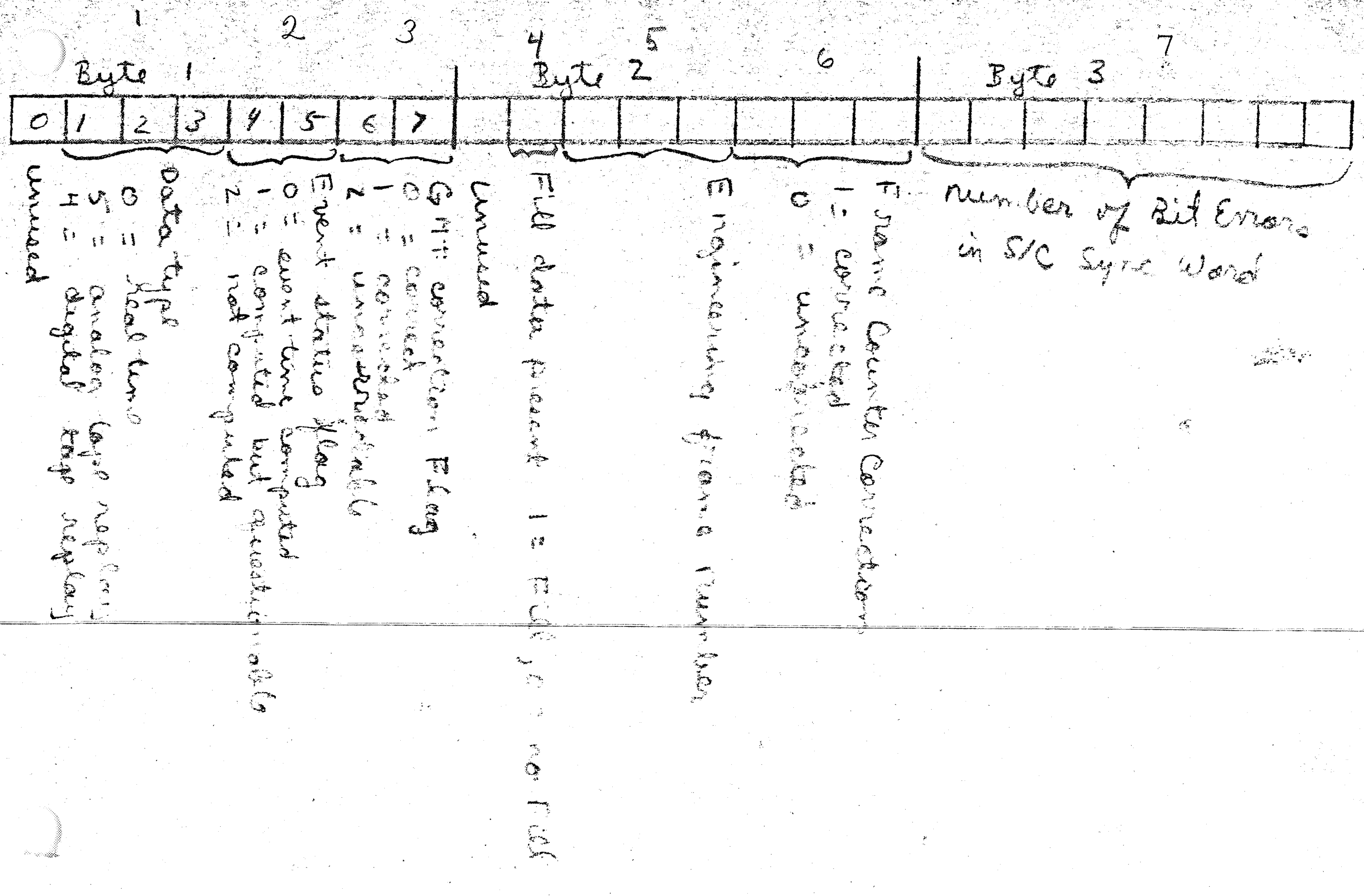

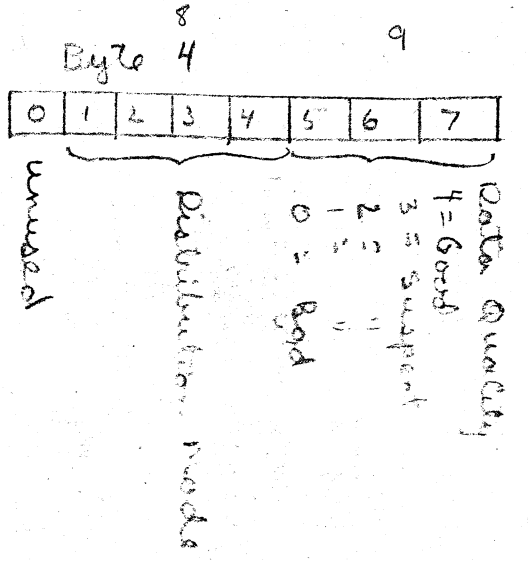

figure 5

HELIOS A

EXPERIMENTER 7

EDR

FORMAT 3 & 2

	DESCRIPTION	BYTES
EVT	S/C EVENT TIME	4
GMT	GROUND REC'D TIME	4
FN	FRAME NUMBER	2
TI	SPACECRAFT CLOCK	2
SI	STATUS INDICATORS	4
LT	ONE WAY LIGHT TIME	4
8 -13	SCIENTIFIC DATA	6
80-85	SCIENTIFIC DATA	6
*11	ENGINEERING DATA	1
*16-17	ENGINEERING DATA(SPIN RATE)	2
*28	ENGINEERING DATA	1
*40-45	ENGINEERING DATA	6
*64-69	ENGINEERING DATA	6
*88-89	ENGINEERING DATA	2
FILL	FILL ONES or Day	2
		52

* ENGINEERING DATA WORDS

SAME AS FORMAT 1

figure 6

HELIOS A

EXPERIMENTER 7

EDR

NOV 27 1973

FORMAT 1

		DESCRIPTION	BYTES	
①	EVT	S/C EVENT TIME	4	
②	GMT	GROUND REC'D TIME	4	
⑫	FN	FRAME NUMBER'	2	
⑬	TI	SPACECRAFT CLOCK	2	
	SI	STATUS INDICATORS	4	13-16
③	LT	ONE WAY LIGHT TIME	4	20
	8 -13	SCIENTIFIC DATA	6	26
	*11	ENGINEERING DATA	1	27
	*16-17	ENGINEERING DATA(SPIN RATE)	2	28
	*28	ENGINEERING DATA	1	
	*40-45	ENGINEERING DATA	6	
	*64-69	ENGINEERING DATA	6	
	*88-89	ENGINEERING DATA	2	
	FILL	FILL ONES	8	
			52	

* ENGINEERING DATA WORDS

② ENG FRM 0 - 11,16,17

⑤ ENG FRM 1 - 11,28,40,41,42,43,44,45,
64,65,66,67,68,69,88,89

ENG FRM 2 - 11,40,41

ENG FRM 3 - 11,28

EDR FRAME = 52 BYTES (8 BITS)
EDR RECORD = 72 FRAMES
= 3744 BYTES

figure 7

Engineering words

Byte	Bit	Description
1		power status
2&3		spin rate
4	0&1	X-ray window
	2&3	Internal calibrator
	4	X-ray VLT
	5	S/C TR SY
	6	Black out mode
	7	X-ray SCT
5		VLET1 or HET temp
6		LET temp or VLET2 temp
7		DET MNT PLT TEMP
8		X-RAY DET TEMP
9		TBS Plate 1 temp
10		TBS Plate 2 temp
11		Electron TCS temp
12		Base Plate temp
13		+12V monitor
14		+6V Digital monitor
15		+6V analog monitor
17		+7.75V monitor
18		+4.7V monitor
19		Base plate temp

fig 8

HELDRP

Figure 9 gives a typical call to HELDRP with the following options:

IDRUN=B	Helios B
QRATTP=F	no RATES tape generated
QPHATP=F	no PHA tape generated
QPRTID=T	
QPANIC=T	
NQLHIG=4	} Data quality must be 4
NQLLOW=4	
QMERGE=T	merge the new data with the old, but this is overridden by QLOOK
QCTLGT=F	no catalog tape generated
QLOOK=T	quick look at data without affecting catalog or old data
DTPPHA='E04088'	tape to receive PHA
DTPRAT='E04089'	tape to receive RATES
EDRLIB=T	the data from the compressed library will be used
FULLTP=T	process the whole tape as opposed to file mode
QREPLC=T	replace bad data with good, overridden by QLOOK
MODE = REJDM7	DM7 data is not processed, use old merge
SAT = B	Helios B

This load module would be called M2.ZBGEM.SP002.BREJDM7.

HELDRP then searches for the catalog tape with GETLIB and mounts the tape, reads the first data label record with EDRINT and unpacks it with UPKLBL and calls EXTRCT to process the data. EXTRCT processes the data records one frame at a time. It first calls EDRCHK to check the data quality.

```
//HELDRP PROC SAT=A,MODE=ACCDM7,PGMID=ZERTC,SPON=SD002,QUAL=M2
//*        THIS STEP CHECKS TO MAKE SHURE LOAD MODULE IS ON DISK
//CHECK EXEC PGM=SRCHDS,PARM='M2.ZBGEM.SD002.&SAT.&MODE'
//*        THIS STEP RELAODS THE MODULE IF IT IS NOT ON THE DISK
//RELOAD EXEC PGM=VSCOPY,COND=(4,GT),REGION=150K,PARM='SIZE=500K'
//SYSPRINT DD SYSOUT=A,DCB=BLKSIZE=3509


//SYSUT3 DD UNIT=2314,SPACE=(TRK,(1,10))
//SYSUT4 DD UNIT=2314,SPACE=(TRK,(1,10))
//SYSUT1 DD DSN=M2.ZBGEM.TAPE.&SAT.&MODE,DISP=SHR
//SYSUT2 DD DSN=M2.ZBGEM.SD002.&SAT.&MODE,DISP=(NEW,CATLG),UNIT=2314,
//            VOL=SER=K3USR9,SPACE=(TRK,(20,5,1),RLSE)
//SYSIN DD DUMMY
//DRP     EXEC PGM=HELDRP,REGION=325K
//STEPLIB DD DSN=M2.ZBGEM.SD002.&SAT.&MODE,DISP=SHR
//* THE ACCEPTABLE SATELLITE IDENTIFIERS ARE
//*   SAT=A
//*   SAT=B
//* THE ACCEPTABLE MODES ARE:
//*      MODE=ACCDM7      TO ACCEPT DM7 DATA WITH OLD MERGE
//*      MODE=REJDM7      TO REJECT DM7 DATA WITH OLD MERGE
//*      MODE=ACCDM7N     TO ACCEPT DM7 DATA WITH NEW MERGE
//*      MODE=REJDM7N     TO REJECT DM7 DATA WITH NEW MERGE
//SYSPRINT DD SYSOUT=A
//FT05F001 DD DDNAME=DATAS
//FT06F001 DD SYSOUT=A,DCB=(RECFM=VBA,LRECL=137,BLKSIZE=7256,BUFNO=1)
//FT08F001 DD SYSOUT=A,DCB=(RECFM=VBA,LRECL=137,BLKSIZE=7256,BUFNO=1)
//FT30F001 DD SYSOUT=A,DCB=(RECFM=VBA,LRECL=137,BLKSIZE=7256,BUFNO=1)
//FT31F001 DD SYSOUT=A,DCB=(RECFM=VBA,LRECL=137,BLKSIZE=7256,BUFNO=1)
//FT32F001 DD SYSOUT=A,DCB=(RECFM=VBA,LRECL=137,BLKSIZE=7256,BUFNO=1)
//FT33F001 DD SYSOUT=A,DCB=(RECFM=VBA,LRECL=137,BLKSIZE=7256,BUFNO=1)
//FT60F001 DD SYSOUT=A,DCB=(RECFM=VBA,LRECL=137,BLKSIZE=7256,BUFNO=1)
//FT80F001 DD SYSOUT=A,DCB=(RECFM=VBA,LRECL=137,BLKSIZE=7256,BUFNO=1)
//FT10F001 DD UNIT=(1600,,DEFER),DISP=SHR,DSN=&&HELTAP,LABEL=(,NL),
// VOL=SER=DUMY1,DCB=(RECFM=U,LRECL=3744,BUFNO=1,DEN=3)
//FT25F001 DD DSN=&&EDRLIB,DISP=SHR,VOL=SER=LIBNUM,LABEL=(,SL),
//              DCB=BLKSIZE=14976,UNIT=AFF=FT10F001
//FT12F001 DD UNIT=(1600,,DEFER),DISP=SHR,DSN=HELPHA,LABEL=(,SL),
// VOL=SER=DUMY2,DCB=(RECFM=VB,LRECL=4376,BLKSIZE=8756,BUFNO=1,DEN=3)
//FT13F001 DD UNIT=(1600,,DEFER),DISP=SHR,DSN=HELPHA,LABEL=(,SL),
// VOL=SER=DUMY3,DCB=(RECFM=VB,LRECL=4376,BLKSIZE=8756,BUFNO=1,DEN=3)
//FT15F001 DD UNIT=(1600,,DEFER),DISP=SHR,DSN=HELRAT,LABEL=(,SL),
// VOL=SER=DUMY4,DCB=(RECFM=VB,LRECL=2104,BLKSIZE=8420,BUFNO=1,DEN=3)
//FT16F001 DD UNIT=(1600,,DEFER),DISP=SHR,DSN=HELRAT,LABEL=(,SL),
// VOL=SER=DUMY5,DCB=(RECFM=VB,LRECL=2104,BLKSIZE=8420,BUFNO=1,DEN=3)
//* CATALOG BACKUP TAPES
//FT17F001 DD UNIT=AFF=FT10F001,DISP=SHR,DSN=HELCAT,LABEL=(,SL),
// VOL=SER=DUMY6,DCB=(RECFM=VB,LRECL=7288,BLKSIZE=7292,BUFNO=1,DEN=3)
//FT18F001 DD UNIT=AFF=FT12F001,DISP=SHR,DSN=HELCAT,LABEL=(,SL),
// VOL=SER=DUMY7,DCB=*.FT17F001
//FT19F001 DD UNIT=AFF=FT13F001,DISP=SHR,DSN=HELCAT,LABEL=(,SL),
// VOL=SER=DUMY7,DCB=*.FT17F001
//*  DISK LOGISTICS CATALOG
//FT20F001 DD DSN=&QUAL..&PGMID..&SPON..H&SAT.DRSLOG,DISP=SHR
//* TEMPORARY LOGISTICS CATALOG DISK
//FT21F001 DD UNIT=2314,SPACE=(7294,15),DCB=BLKSIZE=7294,
// DSN=&&LOGCAT
//* CATALOG POINTER
//FT40F001 DD DISP=SHR,DSN=&QUAL..&PGMID..&SPON..H&SAT.DRSCTP
//FT41F001 DD DISP=SHR,DSN=&QUAL..&PGMID..&SPON..H&SAT.DRSCT1
//FT42F001 DD DISP=SHR,DSN=&QUAL..&PGMID..&SPON..H&SAT.DRSCT2

//FT43F001 DD DISP=SHR,DSN=&QUAL..&PGMID..&SPON..H&SAT.DRSCT3
//FT44F001 DD DISP=SHR,DSN=&QUAL..&PGMID..&SPON..H&SAT.DRSCT4
//* CATALOGS FOR COMPRESSED EDR LIBRARY
//* CATLOG
//FT26F001 DD DSN=M2.ZB2NL.SD002.H&SAT.CATLOG,DISP=SHR,
//       DCB=(RECFM=FB,LRECL=160,BLKSIZE=7200)
//* INDEX POINTER FOR CATALOG
//FT27F001 DD DSN=M2.ZB2NL.SD002.H&SAT.INDEX,DISP=SHR,
//         DCB=(RECFM=F,BLKSIZE=7292,BUFNO=1)
//SYSUDUMP DD SYSOUT=A,SPACE=(CYL,(3,3))
//       PEND


// EXEC PROC=HELDRP,MODE=REJDM7,PGMID=WK2MV,SAT=B,REGION.DRP=325K
//DRP.DATAS DD *
 &OPTION IDRUN='B',GRATTP=F,GPHATP=F,QPRTID=T,QPANIC=T,NQLHIG=4,NQLLOW=4,
   GMERGE=T,GCTLGT=F,GLCOK=T,CTPPHA='EC4088',CTPRAT='L04089',
   EDRLIB=T,FULLTP=T,            &END
 &EDRTAP  TPNAME='HE0250',GREPLC=T,            &END
```

fig 9

EDRCHK

EDRCHK is called from EXTRCT to check the data. There are four versions of EDRCHK. The accept DM7 versions are in ZBEWR.LIBGEN.LOAD. The difference is at line 4400 the reject DM7 versions branch to skip the frame if it is DM7 and the accept DM7 branches to skip the frame if it is not DM7. In addition the accept DM7 will ignore the blackout mode bit whereas the reject DM7 will skip any data record where the black out mode bit changes.

EDRCHK begins with UPKSTA and DM7CHK which unpack word 4 of the data and write a message if it is a DM7 frame. The branch refered to earlier occurs and then in line 4900 to line 8700 a check for frame time interval begins. There are 1152 bits each minor frame of which 416 are included in EXP 7. A bit rate determines the seconds per frame and the GMT interval (data word 2) is compared to this. The difference is placed in a percent variable and printed out. The test is meaningless in DM7.

Index is equivalenced odd for RATES data or even for PHA data. Bit 48 of each science word is 1 for RATES and 0 for PHA. In line 10200 the blackout mode bit is checked. HRATIO is the number of PHA science words to RATES science words. There are no PHA words in DM7 or blackout mode and HRATIO is set equal to 0. HRATIO is calculated in EXTRCT and compared against ICNT in EDRCHK. A message is printed if the theoretical ratio differs from ICNT, the actual ratio.

In line 13800 the engineering data is checked. If either of the two bytes of the spin rate is zero or if the +4.7V monitor byte or the Base plate temp byte is zero, the frame is skipped. The branch to 75 prints the message of NO ENG and sets QRCSKP which avoids the print for the rest of the file.

At line 20000 the quality of the data (HQUAL from data word 4) is checked to be sure it is "4" and a branch to BOMODE is made. BOMODE writes a message every time the blackout mode bit changes and sets REIBOM which sets QREND which skips the record if the bit changed. This test is bypassed in the accept DM7 versions.

RATOUT

EXTRCT sets ITYPE odd or even at 9600 by using the last byte of the science word. If even it is a PHA frame and branches to 80. There at line 16600 EXTRCT tests bit 37 of the science word in Helios B. If it is 0 the word is gamma ray burst data and a message is printed. If bit 37 is 1 it is PHA data and the PHA data is unpacked in PHAUPK and stored in PHAOUT.

If ITYPE is odd then bit 48 of the science word must be 1 and the frame is RATES data. RATUPK extracts the data according to the format in table 1. LOG12 decompresses the data and RATOUT stores the data.

RATOUT is called four times beginning with line 1 of the RATES block. Just before the 4th call to RATOUT is made, a call to PTHIRD puts together the split RATES of R9, R1, R14 or R17. Line 0 of the RATES block is placed with the previous block unless it is blackout mode or DM7, then line 0 is placed with the next

RATES block. The position of each block is determined by the unsectored sequence ID (see table 1). This is equal to HURSEQ in EXTRCT and at line 11400 in EXTRCT, HURSEQ is increased by one for HRATIO=0 i.e. 'line' 0 is placed in the next RATES block.

RATOUT places the data into the memory area MRNFM or MRNFM5 if it is format 5. The data consists of four pages. Each page contains two RATES blocks, the first an even numbered unsectored sequence ID, and the next is the following odd numbered ID. IDS432 = unsectored sequence ID and is used to determine the page number from 1 to 4 beginning with IDS432=0 being page 1 (HPG=1) and IDS432 = 6 is page 4. Whenever four pages are filled or data continuity is broken, MRNFM is written onto the RATES tape.

Turning our attention to RATOUT, the first test at line 7500 is for a line 1 (ILINE=1) of a RATES block and an even unsectored rates sequence ID (IURSEQ). When this is found, the memory is filled with -20000.

RATOUT (cont)

A call to ENGDAT at line 11700 unpacks the Engineering words and these are stored. At line 12500 MSRNE is set equal to the milliseconds (EVT) of the last frame and the unsectored ID and sectored ID's are stored. At line 14600 the data is set negative if the last data in that spot was missing. A zero is set equal to -21000 if the data was missing before. Line 16000 to 23200 are for format 5. The label information is placed in memory and the four pages of data are written to ~~the~~ RATES tape with a call to WRTRAT.

The first data group for each run must be the OPTION group of cards. This group is used to specify various program variables and options to be used throughout the current run. All program variables and options which may be specified in this group are listed below along with their associated purpose and the standard default value they assume whenever they are not specified. The underlined keywords and equal sign must be written exactly as shown.

IDRUN=	'F' If Pioneer F EDR tapes are to be processed. 'G' If Pioneer G EDR tapes are to be processed. (Default - The job is terminated with a user completion code of 47.)
NQLHIG=	The high limit for the Data Quality Indicator to be used when accepting data this run. The Data Quality Indicator may have the following values: 0 - Data is bad (no sync) 1 - At least two quality indicators are bad (data is suspect). 2 - At least one quality indicator is bad (data is suspect). 3 - All quality indicators are good (data is good). (Default = 3)
NQLLOW=	The low limit for the Data Quality Indicator to be used when accepting data this run (see NQLHIG for possible values). (Default = 2)
HCPUTM=	The CPU time in minutes needed to process one EDR tape and terminate the job normally which includes the generation of the CATALOG tape when specified (see QCTLGT). (Default = 2 min)
HIOTM=	The I/O time in minutes needed to process one EDR tape and terminate the job normally which includes the generation of the CATALOG tape when specified (see QCTLGT). (Default = 2 min if CATALOG tape not being created and 5 min if CATALOG tape is being created.)

QMERGE=
T If data processed this run is to be merged with data processed previously.
F If data processed this run is to be added after all data processed previously.

(Default = F)

QPHATP=
T If PHA tapes are to be created this run.
F If PHA tapes are not to be created this run.

(Default = T)

QRATTP=
T If RATES tapes are to be created this run.
F If RATES tapes are not to be created this run.

(Default = T)

QCTLGT=
T If CATALOG tapes are to be created this run.
F If CATALOG tapes are not to be created this run.

(Default = T)

QCMMND=
T If command data is to be processed this run.
F If command data is not to be processed this run.

(Default = T)

QPRTID=
T If the entire FILE/LOGISTICS/HISTORY catalog is to be printed at the end of the run.
F If only the updated section of the catalog is to be printed.

(Default = F)

QATT=
T If attitude data is to be processed this run.
F If attitude data is not to be processed this run.

(Default = T)

NUMCAT=
The sequence number of the DRS Tape Catalog to be read. This number +40 is the FORTRAN logical unit from which the Catalog will be read.

(Default - The DRS Tape Catalog will be read from the last unit on which the latest version of the DRS Tape Catalog was written by PIODRP. This Catalog is pointed to by the DRS Tape Catalog Pointer on disk.)

QLOOK=
T If Quick-Look processing is to be performed this run. The DRS Tape Catalogs and the current FILE/LOGISTICS/HISTORY catalog are not referenced for this type of processing. Also, the command data and CATALOG tapes are not processed.

	F If normal processing is to be performed this run. (Default = F)
DTPPHA=	Labels of tapes to be used for PHA tapes when Quick-Look processing is specified (see QLOOK). A maximum of 10 tape labels may be supplied. Each tape label must be enclosed in apostraphes and be separated from the previous one by a comma. (Default - Blank PHA tapes will be used from the latest version of the DRS Tape Catalog.)
DTPRAT=	Labels of tapes to be used for RATES tapes when Quick-Look processing is specified (see QLOOK). A maximum of 10 tape labels may be supplied. Each tape label must be enclosed in apostraphes and be separated from the previous one by a comma. (Default - Blank RATES tapes will be used from the latest version of the DRS Tape Catalog.)

One or more NAMELIST groups with the name EDRTAP must follow the OPTION group of cards. These cards are used to identify the EDR tapes to be processed this run and these tapes must be submitted in time sequence. The form of the data items within this group is given below along with the standard default value they assume whenever they are not specified. The underlined keywords and equal sign must be written exactly as shown.

DTSLOT=	The loaction (tape slot) or symbol identifying the EDR tape to be processed. The tape slot or symbol may contain a maximum of six characters and must be enclosed in apostrophes. This symbol appears on the operator's console whenever the EDR tape is to be mounted. (Default - None. The EDR tape must always be identified.)
DTLABL=	The label or identifying symbol for the EDR tape being processed. This label may contain a maximum of six characters and must be enclosed in apostrophes. This label appears in all the printed reports generated by PIODRP which are associated with this EDR tape. (Default - Assumes the value of DTSLOT when not specified.)

QREPLC=	T If the PHA and RATES data processed from this EDR tape is to replace all PHA and RATES data processed previously for the same time period. F If the PHA and RATES data processed from this EDR tape is not to replace all PHA and RATES data processed previously for the same time period. (Default = F) Note: When data replace is specified (QREPLC=T) for a particular EDR tape, the tape must either be the last tape processed in the run or all subsequent EDR tapes to be processed must also have data replace specified. Also, data merge must be specified (QMERGE=T) on the OPTION group of cards.

6.1.3.3 Printed Reports

PIODRP provides four types of printed reports at the end of each production run; a Processing Messages Report, a Data Quality Summary Report, a FILE/LOGISTICS/HISTORY Catalog Report, and the Current Status Report. Each page of a report contains the following standard header information:

a. Type of report.
b. Name of the spacecraft and experiment.
c. Date of run (MM/DD/YY).
d. Page number.

6.1.3.3.1 Processing Messages Report

The Processing Messages Report provides a history of all the EDR tapes processed and the errors (abnormal conditions) encountered. Each message produced has a standard format (reading left to right) as follows:

PHA Tape Logical Record Format

Displacement	Type	Description
0	I*4	Time of day (MS) for first page contained in record
4	I*4	Time of day (MS) for page which is expected to immediately follow the last page in this record
8	I*2	Day (RMJD) for first page contained in record
10	I*2	Day (RMJD) for page which is expected to immediately follow the last page in this record why
12	I*4	Round Trip Light Time
16	I*4	Spacecraft Clock
20	I*2	Absolute File Number
22	I*2	Time Correction Flag
24	I*2	Ratio of PHA blocks to RATES blocks
26	I*2	Bit Rate (8, 16, 32, 64, 128, 256, 512, 1024, 2048, 4096)
28	I*2	Format (1, 2, 3, 5)
30	I*2	Frame Counter Correction
32	I*2	Data Type
34	I*2	Data Quality
36		All the subcom data associated with the first page of data contained in the record. Refer to Tables 1 and 2 for a description of the subcom data for the two format groups.
84 (128)	I*4	All the rates data associated with the first page of data contained in PHA record. The rates data associated with each page appear in eight consecutive words, as follows:

Displacement	Type	Description
		(1) HET RATE R1 - (A2K1 + A1CI)B CIII (2) HET RATE R1 - (A2K1 + A1CI)B CIII (3) HET RATE R2A - A1 $\overline{A2}$ B CIII (4) HET RATE R2B - A1 BK2 $\overline{CIII}$ (5) HET RATE R3A - A2 B CII (6) LET RATE R11A - DI DII $\overline{F}$ (7) LET RATE R11B - DI DII Σ D $\overline{F}$ (8) Computed HET RATE R1 = (R6B + R7A + R7B + R8A + R8B) All rates which fail the trend check will be indicated by a negative rate value. Whenever a rate with a value of zero fails the trend check, it will be set to the value -21000000. Padded rates will be indicated by the value -20000000.
	I*2	All the PHA data associated with the first page of data contained in the PHA record. Each PHA entry, comprised of a HET and LET event, has a unique time associated with it and appears in three consecutive words, as follows: 0(MSB)..........................31(LSB) (1) HET - 1 HET - 2 (2) HET - 3 LET - 1 (3) LET - 2 LET - 3 Padded/missing PHA data is indicated by a negative one in the PHA entry. There is a varying number of PHA readouts per page depending upon the PHA/RATE block ratio: At a ratio of 5:1, there are 160 PHA readouts; at 3:1, there are 96 PHA readouts; and at 1:1, there are 32 PHA readouts. (See Table 3 for the structure of a PHA readout.)

Displacement	Type	Description
D_2 (D_2^1)		All the subcom, Rates, and PHA data for the second page of data contained in the record
D_3(D_3^1)		All the subcom, Rates, and PHA data for the third page of data contained in the record
D_4(D_4^1)		All the subcom, Rates, and PHA data for the fourth page of data contained in the record

Note: The first displacement is for data transmitted in formats 1, 2, or 3. The record displacement is for data transmitted in format 5. Actual displacements for page 2 - 4 are dependent upon bit rate and the PHA/RATES block ratio.

Table 1. PHA Tape

(Subcom data for format group 1 - formats 1, 2, 3)

Displacement	Type	Description
0	I*2	Spin Rate (in RPM)
2	I*2	HET (E7A) temperature
4	I*2	VLET1 (E7B1) temperature
6	I*2	VLET2 (E7B2) temperature
8	I*2	LET (E7C) temperature
10	I*2	detector mounting plate temp.
12	I*2	X-Ray detector temperature
14	I*2	thermal blanket support plate 1 temp.
16	I*2	thermal blanket support plate 2 temp.
18	I*2	electronics temperature
20	I*2	base plate temperature
22	I*2	+12 v monitor
24	I*2	+6 v digital monitor
26	I*2	+6 v analog monitor
28	I*2	+7.75 v monitor
30	I*2	+4.7 v monitor
32	I*2	base plate temperature (front)
34	I*2	Power status (1=on, 0=off)
36	L*1	X-Ray Window Clock
37	L*1	X-Ray Window Data
38	L*1	Internal Calibrator A
39	L*1	Internal Calibrator B
40	L*1	X-Ray high voltage
41	L*1	Sector synchronizer
42	L*1	Force blackout mode
43	L*1	X-Ray sector data mode
44	I*2	X-Ray command reg.
46	I*2	X-Ray XEQ. reg.

(12 words)

Table 2. PHA Tape

(Subcom Data for format group 2 - format 5)

Displacement	Type	Description
0 - 43	same as 0 - 43, Table 1, for sequence 1	
44 - 87	same as 0 - 43, Table 1, for sequence 2	
88 - 91	same as 44 - 47, Table 1	
(23 words)		

Table 3. Helios PHA Events

Halfword 1	METTAAAAAAAAAAAA
Halfword 2	BBBBBBBBBBBBCCCC
Halfword 3	CCCCCCCCRSSQPPN

Where:

M = 0, data is good

= 1, data is missing 1 padded

E = 0, LET event

= 1, HET event

TT = 00, $A1\overline{A2}BCIII$ (HET)/$DIDII\,\Sigma\,D\,\overline{\overline{F}}$ (LET)

= 01, A2BCIII (HET)/$DIDII\,\overline{\overline{F}}$ (LET)

= 10, $(A2K1 + A1CI)\,B\overline{CIII}$ (HET)/(No LET)

= 11, $A1BK2\overline{CIII}$ (HET)/(No LET)

R = 0, CII threshhold not exceeded

= 1, CII threshhold is exceeded

HET only

SSS = 0-7, sectors 0-7, respectively

Q = 0, PHA word 1 is the A amplitude

= 1, PHA word 1 is the CIII amplitude

HET only

PP = 0-3 priorities (HET)/0-1 priorities (LET)

N = 0, good event

= 1, null event

HELDRP DATA FLOW LEVEL 1

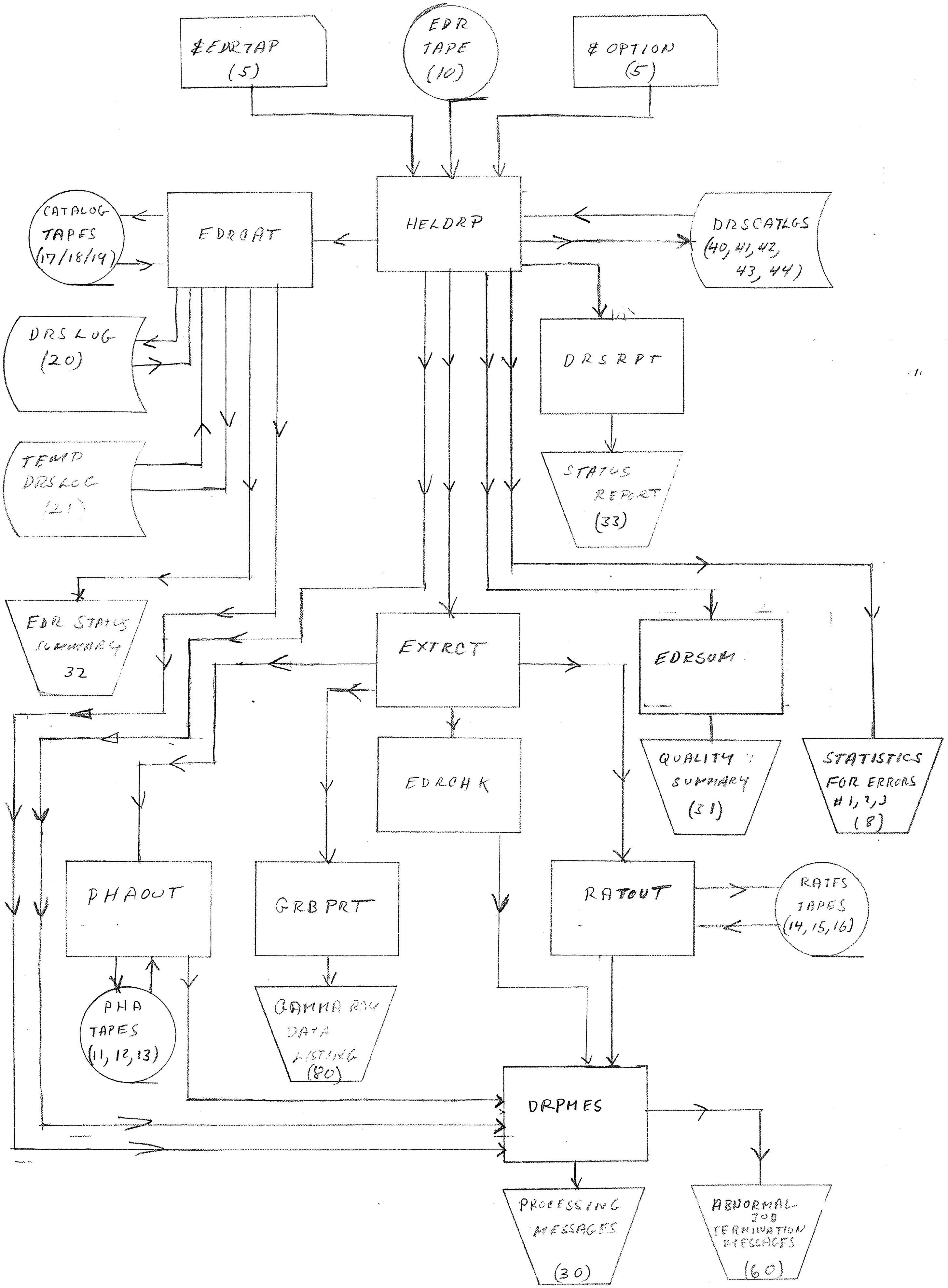

HELIOS LIBGEN PROGRAM - OPERATOR'S GUIDE

The purpose of Helios LIBGEN program is to create a permanent library of Helios EDR tapes.

EDR tapes entered into the system must be assigned volume serial numbers of the form $H\left\{\begin{matrix}A\\B\end{matrix}\right\}nnnn$, where nnnn is the serial number of EDR.

Library tapes created by the system must be assigned volume serial numbers of the form $H\left\{\begin{matrix}A\\B\end{matrix}\right\}L\,nnn$, nnn being the serial number of library volume.

Present version of the program expects to process input EDR's in the order of sequential increasing serial numbers starting with serial 0001. The program expects to create output tapes in a similar order starting with serial 001.

There are 4 programs in the LIBGEN system.

- Catalog Allocation and Initialization Program

  This program allocates and initializes the index and catalog datasets for the specified satellite. Since this needs to be done only once for a satellite, no general instructions will be provided for the use of this program. Until further notice, contact N. Lal.

- INPUT Volume allocation Program - LOGIN

  This program allows the user to ~~allocate a num~~ inform the system as to the availability of input volumes. These volumes must have been assigned slots using TLS and must be in the Bldg 1 computer library befre next LIBGEN program execution.

This program is run as follows:

```
//        EXEC    PGM= ZB2NLHIN, PARM='{A}, nnnn[,mmmm]'
                                      {B}
//STEPLIB    DD    DSN= SYS2.LOADLIB, DISP= SHR
//SYSPRINT   DD    SYSOUT= {sysout class)
//FT39F001   DD    DSN= M2.ZB2NL.SB001.H{A}NDEX, DISP= SHR
                                        {B}
```

The first parameter of PARM field is one character satellite identification, nnnn is the four digit serial number which is the first (or only) input serial to be logged in, and mmmm is the four digit number of contiguous serials numbers to be logged in. If conflicts in this field are found an error message describing these is provided.

- Output Volume Allocation Program - LOGOUT

This program performs the same function for output volumes as is performed by LOGIN for input volumes. Except for replacing program name field on the EXEC card by ZB2N$\underset{\uparrow L?}{\text{H}}$OU, no other changes need to be made in JCL for login program.

INDEX & CATALOG STRUCTURE

Index entry corresponding to library volume - 4 bytes fullword alligment.

half word 1

-1 volume is not allocated

0 volume is allocated but has not been used

>0 serial # of input volume ~~that is~~ data from which ~~[illegible]~~ appears in the first file of volume

half word 2

meaningful only if half word 1 > 0.
sequence # of dataset on input volume data from which appears in the first file of volume.

Index entry corresponding to EDR volume. - 1 byte

X'00' - volume was never allocated
X'10' - volume is allocated
X'11' - volume is allocated & some processing has taken place
X'01' - volume has been processed completely
X'03' - " , but ~~at~~ least one file could not be read due to I/O error on label record
X'02' - The only file on volume Could not be read due to I/O error on label.

RATES Tape Logical Record Format

Displacement	Type	Description
0	I*4	Time of day (MS) for first page contained in record
4	I*4	Time of day (MS) for page which is expected to immediately follow the last page in this record
8	I*2	Day (RMJD) for first page contained in record
10	I*2	Day (RMJD) for page which is expected to immediately follow the last page in this record
12	I*4	Round Trip Light Time
16	I*4	Spacecraft Clock
20	I*2	Absolute File Number
22	I*2	Time Correction Flag
24	I*2	Ratio of PHA blocks to RATES blocks
26	I*2	Bit Rate (8, 16, 32, 64, 128, 256, 512, 1024, 2048, 4096)
28	I*2	Format (1, 2, 3, 5)
30	I*2	Frame Counter Correction
32	I*2	Data Type
34	I*2	Data Quality
36		All the subcom data associated with the first page of data contained in the record. Refer to Tables 1 and 2 for a description of the subcom data for the two format groups.
92 (136)	I*4	All the rates data associated with the first page of data contained in record. Each page consists of 4 sets (2 sectored and 2 unsectored) of 32 and 20 rates respectively, which are uniquely identified by the corresponding rate sequence ID's appearing in the associated set of subcom data. The rates data associated with each page appears in 104 consecutive words, as follows: 1 - Sectored Rate (First Set) . . .

MRNFM (1, IPAGE) = Subcom

15	SR1
22	SR2
30	SR3
38	SXR
46	R1
56	R11
67	SR1
75	SR2
82	SR3
90	SXR
99	R1
109	R11

RATES Tape Logical Record Format (continued)

Displacement	Type	Description
		32 - Sectored Rate (First Set) 33 - Unsectored Rate (First Set) • • • 52 - Unsectored Rate (First Set) 53 - Sectored Rate (Second Set) • • • 84 - Sectored Rate (Second Set) 85 - Unsectored Rate (Second Set) • • • 104 - Unsectored Rate (Second Set)
		Refer to Table 3 to determine the rates data associated with each unsectored and sectored rate sequence ID.
564 (652)		All the subcom and Rates data for the second page of data contained in the record.
1036 (1168)		All the subcom and Rates data for the third page of data contained in the record.
1508 (1684)		All the subcom and Rates data for the fourth page of data contained in the record.

Note: The first displacement is for data transmitted in formats 1, 2, or 3. The second displacement is for data transmitted in format 5.

Table 1. RATES Tape

(Subcom data for format group 1 - formats 1, 2, 3)

Displacement	Type	Description
0	I*2	Spin Rate (in RPM)
2	I*2	HET (E7A) temperature
4	I*2	VLET1 (E7B1) temperature
6	I*2	VLET2 (E7B2) temperature
8	I*2	LET (E7C) temperature
10	I*2	detector mounting plate temp.
12	I*2	X-Ray detector temperature
14	I*2	thermal blanket support plate 1 temp.
16	I*2	thermal blanket support plate 2 temp.
18	I*2	electronics temperature
20	I*2	base plate temperature
22	I*2	+12 v monitor
24	I*2	+6 v digital monitor
26	I*2	+6 v analog monitor
28	I*2	+7.75 v monitor
30	I*2	+4.7 v monitor
32	I*2	base plate temperature (front)
34	I*2	Power status (1=on, 0=off)
36	L*1	X-Ray Window Clock
37	L*1	X-Ray Window Data
38	L*1	Internal Calibrator A
39	L*1	Internal Calibrator B
40	L*1	X-Ray high voltage
41	L*1	Sector synchronizer
42	L*1	Force blackout mode
43	L*1	X-Ray sector data mode
44	I*2	X-Ray command reg.
46	I*2	X-Ray XEQ. reg.
48	I*2	Unsectored Rate Sequence ID (First Set)

Table 1. (continued)

Displacement	Type	Description
50	I*2	Sectored Rate Sequence ID (First Set)
52	I*2	Unsectored Rate Sequence ID (Second Set)
54	I*2	Sectored Rate Sequence ID (Second Set)

(14 words)

Table 2. RATES Tape

(Subcom data for format group 2 - format 5)

Displacement	Type	Description
0 - 43	(same as Table 1)	(same as Table 1)
44 - 87	(same as 0 - 43)	(same as 0 - 43)
88 - 99	(same as 44 -54)	(same as 44 - 54)
(25 words)		

Table 3. RATE Sequence ID

Unsectored	Sectored	Rate
xx	0	SR1A $A_1\overline{A}_2BCI\ \overline{CIII}$ (1-8)
		SR2A $SI_5\ \overline{SII}\ \overline{SII}_a\ \overline{SIII}$ (1-8)
		SR3A $SI_5\ \overline{SII}\ \overline{SII}_a\ \overline{SIII}$ (1-8)
		SXRY Sectored X-Ray (1-8)
0	xx	R1 - $(A_2K_1 + A_1CI)\ B\overline{CIII}$
		R2A - $A_1\overline{A}_2BCIII$
		R3A - A_2BCIII
		R4A - $A_2BK_2CI\ \overline{CII}$
		R5A - $A_2BK_2CI\ CII\ \overline{CIII}$
		R6A - $A_1\overline{A}_2B\overline{CI}$
		R7A - $A_1\overline{A}_2BCI\ CII\ \overline{CIII}$
		R8A - $A_2BK_1CI\ \overline{CII}$
		R9A - $SI\ SII\ SII_a\ SIII$
		R10A - DI_1
		R11A - $DI\ DII\ \overline{F}$
		R12A - $DI\ DII\ E_1\ \overline{F}$
		R13A - $DI\ DII\ E_2\ \overline{F}$
		R14A - DI
		R15A - $SI_1\ \overline{SII}\ \overline{SII}_a\ \overline{SIII}$
		R16A - $SI\ SII\ \overline{SII}_a\ \overline{SIII}$
		R17A - SI (VLET1)
		R18A - $SI_1\ \overline{SII}\ \overline{SII}_a\ \overline{SIII}$
		R19A - $SI\ SII_1\ \overline{SII}_a\ \overline{SIII}$
		R20 - USXR

Table 3. (continued)

Unsectored	Sectored	Rate
xx	1	SR1B - $A_2\ BK_1\ \overline{CIII}$ (1-8)
		SR2B - $SI_6\ \overline{SII}\ \overline{SII}_a\ \overline{SIII}$ (1-8)
		SR3B - $SI_6\ \overline{SII}\ \overline{SII}_a\ \overline{SIII}$ (1-8)
		SXRY - Sectored X-Ray (1-8)
1	xx	R1
		R2B - $A_1\ BK_2\ \overline{CIII}$
		R3B - $A_2\ BK_2\ \overline{CI}$
		R4B - A_1
		R5B - A_2
		R6B - $A_1\ \overline{A}_2$ BCI $\overline{CII}$
		R7B - $A_2\ BK_1\ \overline{CI}$
		R8B - $A_2\ BK_1$ CI CII $\overline{CIII}$
		R9B - SI SII SII_a SIII
		R10B - DI_2
		R11B - DI DII Σ D $\overline{F}$
		R12B - DI DII Σ DE_3 $\overline{F}$
		R13B - DI DII Σ DE_4 $\overline{F}$
		R14B - DII
		R15B - $SI_2\ \overline{SII}\ \overline{SII}_a\ \overline{SIII}$
		R16B - SI $SII_2\ \overline{SII}_a\ \overline{SIII}$
		R17B - SII (VLET 1)
		R18B - $SI_2\ \overline{SII}\ \overline{SII}_a\ \overline{SIII}$
		R19B - SI $SII_2\ \overline{SII}_a\ \overline{SIII}$
		R20

Table 3. (continued)

Unsectored	Sectored	Rate
xx	2	SR1C - DI DII $\overline{F}$ (1-8)
		SR2C - $SI_7\ \overline{SII}\ \overline{SII}_a\ \overline{SIII}$ (1-8)
		SR3C - $SI_7\ \overline{SII}\ \overline{SII}_a\ \overline{SIII}$ (1-8)
		SXRY - Sectored X-Ray (1-8)
2	xx	R1
		R2A - R9A
		R10C - DI_3
		R11A - R13A
		R14C - E_1
		R15C - $SI_3\ \overline{SII}\ \overline{SII}_a\ \overline{SIII}$
		R16C - $SI\ SII_3\ \overline{SII}_a\ \overline{SIII}$
		R17C - SII_a (VLET 1)
		R18C - $SI_3\ \overline{SII}\ \overline{SII}_a\ \overline{SIII}$
		R19C - $SI\ SII_3\ \overline{SII}_a\ \overline{SIII}$
		R20
xx	3	SR1D - DI DII E_1 F (1-8)
		SR2D - $SI_8\ \overline{SII}\ \overline{SII}_a\ \overline{SIII}$ (1-8)
		SR3D - $SI_8\ \overline{SII}\ \overline{SII}_a\ \overline{SIII}$ (1-8)
		SXRY - Sectored X-Ray (1-8)
3	xx	R1
		R2B - R9B
		R10D - DI_4
		R11B - R13B
		R14D - F
		R15D - $SI_4\ \overline{SII}\ \overline{SII}_a\ \overline{SIII}$

Table 3. (continued)

Unsectored	Sectored	Rate	
		R16D - $SI\ SII_4\ \overline{SII}_a\ \overline{SIII}$	
		R17D - SIII (VLET 1)	
		R18D - $SI_4\ \overline{SII}\ \overline{SII}_a\ \overline{SIII}$	
		R19D - $SI\ SII_4\ \overline{SII}_a\ \overline{SIII}$	
		R20	
xx	4	SR1A	(1-8)
		SR2E - $\overline{SI}\ SII_5\ \overline{SII}_a\ \overline{SIII}$	(1-8)
		SR3E - $\overline{SI}\ SII_5\ \overline{SII}_a\ \overline{SIII}$	(1-8)
		SXRY - Sectored X-Ray	(1-8)
4	xx	R1	
		R2A - R9A	
		R10E - DI_5	
		R11A - R13A	
		R14E - B	
		R15A - R16A	
		R17E - SI (VLET 2)	
		R18A - R19A	
		R20	
xx	5	SR1B	(1-8)
		SR2F - $\overline{SI}\ SII_6\ \overline{SII}_a\ \overline{SIII}$	(1-8)
		SR3F - $\overline{SI}\ SII_6\ \overline{SII}_a\ \overline{SIII}$	(1-8)
		SXRY - Sectored X-Ray	(1-8)
5	xx	R1	
		R2B - R9B	
		R10F - DI_6	
		R11B - R13B	
		R14F - CI	

Table 3. (continued)

Unsectored	Sectored	Rate	
		R15B - R16 B	
		R17F - SII (VLET 2)	
		R18B - R19B	
		R20	
xx	6	SR1C	(1-8)
		SR2G - $\overline{\mathrm{SI}}\ \mathrm{SII}_7\ \overline{\mathrm{SII}}_a\ \overline{\mathrm{SIII}}$	(1-8)
		SR3G - $\overline{\mathrm{SI}}\ \mathrm{SII}_7\ \overline{\mathrm{SII}}_a\ \overline{\mathrm{SIII}}$	(1-8)
		SXRY - Sectored X-Ray	(1-8)
6	xx	R1	
		R2A - R9A	
		R10G - DI_7	
		R11A - R13A	
		R14G - CII	
		R15C - R16C	
		R17G - SII_a (VLET 2)	
		R18C - R19C	
		R20	
xx	7	SR1D	(1-8)
		SR2H - $\overline{\mathrm{SI}}\ \mathrm{SII}_8\ \overline{\mathrm{SII}}_a\ \overline{\mathrm{SIII}}$	(1-8)
		SR3H - $\overline{\mathrm{SI}}\ \mathrm{SII}_8\ \overline{\mathrm{SII}}_a\ \overline{\mathrm{SIII}}$	(1-8)
		SXRY - Sectored X-Ray	(1-8)
7	xx	R1	
		R2B - R9B	
		R10H - DI_8	
		R11B - R13B	
		R14H - CIII	
		R15D - R16D	
		R17H - SIII (VLET 2)	
		R18D - R19D	
		R20	

```
                                                  *******************
                                                  *
                                                  *     HELIOS-A  AT
                                                  *
                                                  *   SHIPPING  LETTER
                                                  *
                                                  *******************

                    *** AOMERG VERSION:102280   ***

                    EXPERIMENTER ADDRESS:

                    GODDARD SPACE FLIGHT CENTER


                                                                        S
                                 TAPE            NUMBER         DAY OF
                                 ----            ------         ------

                    INPUT:

                                 GDC             4222DM         183

                    OUTPUT:

                                 EXP 7            43241         183


                                                 ( ALL DATA TIMES R
```

Helios Orbit
tapes / dates covered
lists

```
************************
                       *
TUDE - ORBIT  MERGE    *
                       *
 FOR  EXPERIMENTER  7  *
                       *
************************



          AOMERG RUN NUMBER:     4324

          DATE  ( MM/DD/YY )  11/19/84


ART TIME                       STOP TIME
YEAR     HHMMSS         DAY OF YEAR     HHMMSS
--------------          --------------------


         000000        244            010000


         000000        244            000000


EERENCED TO JAN. 1, 1984 )
```

```
                                                   *********************
                                                   *
                                                   *     HELIOS-A  ATTIT
                                                   *
                                                   *  SHIPPING  LETTER
                                                   *
                                                   *********************

                  *** AOMERG VERSION:102280  ***

                  EXPERIMENTER ADDRESS:

                  GODDARD SPACE FLIGHT CENTER

                                                                     STA
                            TAPE           NUMBER         DAY OF Y
                            ----           ------         --------

                  INPUT:

                            GDC            4264DM            1

                  OUTPUT:

                            EXP 7           41821           61

                                            ( ALL DATA TIMES REF
```

```
****  **********************
                           *
UDE  -  ORBIT   MERGE      *
                           *
FOR   EXPERIMENTER  7      *
                           *
****  **********************



            AOMERG RUN NUMBER:     4182

            DATE   ( MM/DD/YY )   11/29/84


RT TIME                        STOP TIME
EAR     HHMMSS          DAY OF YEAR      HHMMSS
--------------          ----------------------



        000000       182             010000


        000000       182             000000


ERENCED TO JAN. 1, 1984 )
```

Run #	TAPE	RUN DATE	DATES COVERED
ORA	ORA53	7/16/80	4/1/80 - 4/30/80
ORA	ORA54	9/22/80	5/1/80 - 6/30/80
OR1	ORA55	10/23/80	8/1/80 - 8/31/80
ORA	ORA56	1/31/81	7/1/80 - 8/1/80
OR1	ORA57	"	9/1/80 - 9/30/80
OR2	ORA58	"	10/1/80 - 10/31/80
ORA	ORA59	2/5/81	11/1/80 - 12/31/80
ORA	ORA60	4/23/81	1/1/81 - 1/31/81
OR1	ORA61	"	2/1/81 - 2/28/81
ORA	ORA62	5/21/81	3/1/81 - 3/31/81
ORA	ORA63	7/1/81	4/1/81 - 5/31/81
ORA	ORA64	12/15/81	6/1/81 - 6/30/81
ORA	ORA65	12/15/81	7/1/81 - 8/31/81
ORA	ORA66	12/15/81	9/1/81 — 9/30/81
ORA	ORA67	2/26/82	10/1/81 — 12/31/81
ORA	ORA68	4/26/82	1/1/82 - 1/31/82
ORA	ORA69	6/24/82	2/1/82 - 3/31/82
ORA	ORA70	9/9/82	4/1/82 - 4/30/82

Run #	TAPE	RUN Date	Dates Covered
ORA	ORA72	12/7/82	5/1/82 - 5/31/82
ORA	ORA73	2/7/83	6/1/82 — 6/30/82
ORA	ORA74	2/7/83	8/1/82 — 11/30/82
ORA	ORA75	3/7/83	12/1/82 — 12/31/82
ORA	ORA — (Scratch)	5/24/83 (DUPE)	7/1/82 - 7/31/82
ORA	ORA76	8/19/83	1/1/83 — 6/30/83
ORA	ORA77 (3239)	12/14/83	8/1/83 — 8/27/83
ORA	ORA78 (3339)	12/14/82	7/1/83 — 7/31/83
ORA	~~ORA79~~ Bad	Reordered 6/1/84 5/1/84	8/28/83 - 12/31/83
ORA	ORA79	6/1/84	1/1/84 — 2/29/84
ORA	ORA80	6/22/84	8/28/83 — 12/31/83
ORA	ORA 81	12/27/84	3/1/84 — 6/30/84
ORA	ORA82	12/27/84	7/1/84 - 8/31/84
	ORA 83	9/9/85	8/1/84 — 12/31/84
	ORA84	9/9/85	1/1/85 - 2/28/85 Day 59
	ORA85	2/3/86	3/1/85 — 85/6/30
	ORA 86	4/30	1/1/86 - 3/2/86
	ORA87	4/30	7/1/85 - 12/31/85

RUN #	TAPE	RUN DATE	DATES COVERED
OB3	ORB36 ✓	1/22/80 ✓	✓ 3/1/79-3/31/79
OB5	ORB34 ✓	1/22/80	5/1/79-5/31/79
OB4	ORB35 ✓	1/22/80	6/1/79-6/30/79
OA1	ORB39 ✓	1/23/80	✓ 7/1/79-7/31/79
OB2	ORB37 ✓	1/22/80	8/1/79-10/31/79
OB1	ORB38 ✓	1/22/80	✓ 11/1/79-11/30/79
OB2	predicted ORB25	1/29/80	1/1/78-6/30/78
OB2	ORB26	1/29/80 ✓	7/1/78-12/31/78
OB1	ORB 24	1/29/80	4/1/78-5/31/78
OB5	ORB 28	1/29/80	7/1/78-8/31/78
OB1	ORB29	1/24/80	9/1/78-10/31/78
OB3	ORB 31	1/24/80	12/1/78
OB4	predicted ORB27	1/29/80 ✓	1/1/79-12/12/79
OB4	ORB32	1/24/80	1/4/79-2/28/79
OB5	ORB33	1/24/80	4/1/79-4/30/79 ✓
OB2	ORB30	1/24/80 ✓	11/1/78-11/30/78
OB1	ORB19	1/31/80	3/1/77-3/31/77
OB2	ORB20	1/31/80	4/1/77-6/30/77

RUN #	TAPE	RUN DATE	DATES COVERED
OB3	ORB21	1/31/80	7/1/77-7/31/77
OB4	ORB22	1/31/80	1/1/78-3/31/78
OB5	ORB23	1/31/80	8/1/77-12/31/77
OB1	ORB14 Predict?	2/5/80	1/1/77 - 11/30/77
OB2	ORB15 Predict?	2/5/80	1/22/76 - 12/30/76
OB3	ORB16	2/5/80	2/1/77 - 2/28/77
OB4	ORB17	2/5/80	1/1/77 - 1/31/77
OB5	ORB18 unreadable	2/5/80	cancelled noise on tape
OB1	ORB09	2/7/80	1/1/76-1/31/76
OB2	ORB10	2/7/80	7/1/76-8/31/76
OB3	ORB11	2/7/80	1/16/76-5/2/76
OB4	ORB12	2/7/80	5/1/76-6/30/76
OB5	ORB13	2/7/80	10/1/76-10/31/76
OB1	ORB04	2/12/80	4/1/76-5/1/76
OB2	ORB05	2/12/80	6/1/76-6/15/76
OB3	ORB06	2/12/80	9/1/76-9/30/76
OB4	ORB07	2/12/80	11/1/76-12/31/76
OB5	ORB08	2/12/80	12/1/76-12/31/76

RUN #	TAPE	RUN DATE	DATES COVERED
OB1	ORB01	2/14/80	3/1/76-4/1/76
OB2	ORB02	2/14/80	2/1/76-2/29/76
OB3	ORB03	2/14/80	5/1/76-6/1/76
OB1	ORB40	2/25/80	✓12/1/79-12/31/79
ORB	ORB41	3/12/80	✓1/1/80-2/1/80
ORB	~~ORB42~~	BAD	2/1/80- 2/29/80
ORB	ORB42	-	6/1/78- 6/30/78
OB1	ORB43		✓2/1/80-2/29/80
OB2	ORB44		✓3/1/80- 3/9/80

RUN #	TAPE	RUN DATE	DATES COVERED
OA2	ORA45 ✓	1/23/80	3/1/79 - 3/31/79
OA3	ORA46 ✓	1/23/80	7/1/79 - 7/31/79
OA4	ORA47 (3 mos) ✓	1/23/80	8/1/79 - 10/30/79
OA5	ORA48 ✓	1/23/80	11/1/79 - 11/30/79
OA2	ORA 35	1/30/80	6/1/78 - 6/30/78
OA3	ORA 36	1/30/80	7/1/78 - 8/31/78
OA4	ORA37	1/30/80	9/1/78 - 10/31/78
OA5	ORA38	1/30/80	11/1/78 - 11/30/78
OA1	ORA 39	1/25/80	12/1/78 - 12/31/78
OA1	ORA34 Predicted	1/30/80	1/1/79 - 12/12/79
OA2	ORA40	1/25/80	1/1/79 - 2/28/79
OA4	ORA 42	1/25/80	4/1/79 - 4/30/79
OA3	ORA41	1/25/80	5/1/79 - 5/31/79
OA5	ORA43	1/25/80	6/1/79 - 6/30/79
	ORA44 really Helios-B tape - now ORB39		
OA2	ORA30	2/1/80	8/1/77 - 12/31/77
OA4	ORA32	1978 predict 2/1/80	1/1/78 - 6/30/78
OA5	ORA33 predict	2/1/80	7/1/78 - 12/31/78

RUN #	TAPE	RUN DATE	DATES COVERED
OA1	ORA29	2/1/80	1/1/78-3/31/78
OA3	ORA31	2/1/80	4/1/78-4/8/78
	should be thru 5/31/78 according to label		
OA1	ORA24	2/6/80	10/1/76-10/31/76
OA2	ORA25	2/6/80	11/1/76-12/1/76
OA3	ORA26	2/6/80	12/1/76-12/31/76
OA4	ORA27	2/6/80	1/1/77-1/31/77
OA5	ORA28 predict?	2/6/80	4/1/77-7/18/77
OA1	ORA19 predict?	2/11/80	5/1/75-9/1/75
OA2	ORA20	2/11/80	9/1/76-9/30/76
OA3	ORA21	2/11/80	12/11/74-12/30/74
OA4	ORA22	2/11/80	3/1/75-4/1/75
OA5	ORA23	2/11/80	3/1/77-3/31/77
OA1	ORA14	2/14/80	12/11/74-12/12/74
OA2	ORA15	2/14/80	3/1/76-6/30/76
OA3	ORA16	2/14/80	7/1/76-8/31/76
OA4	ORA17	2/14/80	2/1/77-2/28/77
OA5	ORA18	2/14/80	1/1/75
OA1	ORA12	2/14/80	1/1/76-2/1/76

RUN #	TAPE	RUN DATE	DATES COVERED
OA2	ORA13	2/14/80	10/31/75 - 12/31/75
OA3	ORA16	2/14/80	7/1/76 - 8/31/76
OA4	ORA17	2/14/80	2/1/77 - 2/28/77
OA3	ORA09	2/23/80	3/15/75 - 6/30/75
OA4	ORA10	2/23/80	6/30/75 - 9/30/75
OA5	ORA11	2/23/80	10/1/75 - 10/31/75
OA1	ORA07	2/25/80	Bad Tape - can't read
OA2	ORA06	2/25/80	2/1/75 - 6/1/75
OA3	ORA05	2/25/80	2/1/75 - 3/14/75
OA4	ORA04	2/25/80	1/1/75 - 12/31/75
OA5	ORA03	2/25/80	1/1/76 - 12/31/76
OA2	ORA08	2/23/80	2/1/76 - 3/1/76
OA6	ORA01	2/25/80	12/1/74 - 12/31/74
OA7	ORA02	2/25/80	1/1/77 - 7/15/77
OA8	ORA49	2/25/80	12/1/79 - 12/31/79
ORA	ORA50	3/12/80	1/1/80 - 1/31/80
ORA	ORA51		2/1/80 - 2/29/80
OA1	ORA52		3/1/80 - 3/31/80

2/8/80

ORB30 – 23082 } TLC using
ORB36 – 23083 }

B

TAPE STAGING & STORAGE CENTER
INFORMATION PROCESSING DIVISION
NASA, GODDARD SPACE FLIGHT CENTER
GREENBELT ROAD
GREENBELT, MARYLAND 20771

NASA

SATELLITE	EXP. NUMBER	EXP. CODE (Internal)
HS01	X07	TRAIJB

ADDRESS:
HS01 X07 TRAIJBC
DR. JAMES TRAINOR
C/O CSC
BLDG. 2, ROOM 242, GSFC

TOTAL TAPES IN THIS SHIPMENT: 2

DATE SHIPPED: [illegible]

TAPE INVENTORY CONTROL NUMBER	DECOM RUN NUMBER/ SCENE IDENTIFICATION	TAPE INVENTORY CONTROL NUMBER	DECOM RUN NUMBER/ SCENE IDENTIFICATION
XN 0502 5	R1 4/20.1		
XP 0515 K	R1 4/20.1		

Please verify that the tape(s) described above have been received, then sign and date copy number 3 and return it in the accompanying pre-addressed penalty envelope. Copy number 2 may be retained for your records. A complete explanation of any shipping problems should accompany copy number 3 when returned.

DATE RECEIVED:

SIGNATURE:

BOX NUMBER: Nº 14535

(See Instructions on Reverse of Copy Number 3)

GSFC 22-58 (7/82)

COPY 3 RECEIPT

Cril Beard

IPD 6408

Code 562

Fran Shepard

Fran Shepard

X6893

Fran Shepard

562.1

Tele. Repair Service

Ho.Co.

531-

555-1212

954-6611

301-531-5196 DAN Wortman 6711

270-1100

TAPE STAGING & STORAGE CENTER
INFORMATION PROCESSING DIVISION
NASA, GODDARD SPACE FLIGHT CENTER
GREENBELT ROAD
GREENBELT, MARYLAND 20771

NASA

SATELLITE	EXP. NUMBER	EXP. CODE (Internal)
HS01	X07	Traijbc

ADDRESS:

HS01 X07 TRAIJBC

DR. JAMES TRAINOR
C/O CSC
BLDG. 2, ROOM 242, GSFC

TOTAL TAPES IN THIS SHIPMENT	DATE SHIPPED
1	850827

TAPE INVENTORY CONTROL NUMBER	DECOM RUN NUMBER/ SCENE IDENTIFICATION	TAPE INVENTORY CONTROL NUMBER	DECOM RUN NUMBER/ SCENE IDENTIFICATION
YJ0764D	R05001.1		

Please verify that the tape(s) described above have been received, then sign and date copy number 3 and return it in the accompanying pre-addressed penalty envelope. Copy number 2 may be retained for your records. A complete explanation of any shipping problems should accompany copy number 3 when returned.

AR

DATE RECEIVED	SIGNATURE

BOX NUMBER

№ 22350

Celest

(See Instructions on Reverse of Copy Numb

GSFC 22-58 (7/82)

COPY 3 RE

TAPE STAGING & STORAGE CENTER
INFORMATION PROCESSING DIVISION
NASA, GODDARD SPACE FLIGHT CENTER
GREENBELT ROAD
GREENBELT, MARYLAND 20771

SATELLITE	EXP. NUMBER	EXP. CODE (Internal)
HS01	X07	TRAIJBC

HS01 X07 TRAIJBC

DR. JAMES TRAINOR
C/O CSC
BLDG. 2, ROOM 242, GSFC

TOTAL TAPES IN THIS SHIPMENT: 1

DATE SHIPPED: 850827

TAPE INVENTORY CONTROL NUMBER	DECOM RUN NUMBER/ SCENE IDENTIFICATION	TAPE INVENTORY CONTROL NUMBER	DECOM RUN NUMBER/ SCENE IDENTIFICATION
Y8-1726D	R4#446. 1		

Please verify that the tape(s) described above have been received, then sign and date copy number 3 and return it in the accompanying pre-addressed penalty envelope. Copy number 2 may be retained for your records. A complete explanation of any shipping problems should accompany copy number 3 when returned.

DATE RECEIVED:

SIGNATURE:

BOX NUMBER: No 25729

(See Instructions on Reverse of Copy Number 3)

GSFC 22-58 (7/82)

COPY 3 RECEIPT

```
                         ************************
                         *
                         *     HELIOS-A  ATTITUD
                         *
                         *  SHIPPING  LETTER  FO
                         *
                         ************************

*** AOMERG VERSION:102280   ***

EXPERIMENTER ADDRESS:

GODDARD SPACE FLIGHT CENTER


                                           START
             TAPE          NUMBER     DAY OF YEA
             ----          ------     ----------

INPUT:

             GDC           4249MD     183

OUTPUT:

             EXP 7          43661     183


                          ( ALL DATA TIMES REFER
```

```
*********************
                    *
E - ORBIT  MERGE    *
                    *
R  EXPERIMENTER  7  *
                    *
*********************


        AOMERG RUN NUMBER:     4366

        DATE  ( MM/DD/YY )  08/15/85


 TIME                        STOP TIME
R     HHMMSS          DAY OF YEAR      HHMMSS
------------          ----------------------


      000000       366              010000


      000000       366              000000


ENCED TO JAN. 1, 1984 )
```

ORA83

```
                    *********************
                    *
                    *    HELIOS-A  ATTITU
                    *
                    *  SHIPPING  LETTER  F
                    *
                    *********************

*** AOMERG VERSION:102280  ***

EXPERIMENTER ADDRESS:

GODDARD SPACE FLIGHT CENTER

                                    STAR
          TAPE       NUMBER     DAY OF YE
          ----       ------     ---------

INPUT:

          GDC        YG1706        1

OUTPUT:

          EXP 7       50011        1


                     ( ALL DATA TIMES REFE
```

```
**********************
                     *
E - ORBIT  MERGE     *
                     *
R  EXPERIMENTER  7   *
                     *
**********************


         AOMERG RUN NUMBER:     5001

         DATE  ( MM/DD/YY )  08/24/85


 TIME                        STOP TIME
R     HHMMSS          DAY OF YEAR        HHMMSS
------------          ----------------------


      000000          59                 010000


      000000          59                 000000


ENCED TO JAN. 1, 1985 )
```

ORA 84

```
                           **********************
                           *
                           *     HELIOS-A  ATTITU
                           *
                           *  SHIPPING  LETTER  F
                           *
                           **********************

*** AOMERG VERSION:102280  ***

EXPERIMENTER ADDRESS:

GODDARD SPACE FLIGHT CENTER


                                              STAR
              TAPE           NUMBER      DAY OF YE
              ----           ------      ---------

INPUT:

              GDC            4205MD        1

OUTPUT:

              EXP 7           50021       60


                            ( ALL DATA TIMES REFE
```

```
***********************
                      *
DE - ORBIT  MERGE     *
                      *
OR  EXPERIMENTER  7   *
                      *
***********************



         AOMERG RUN NUMBER:   5002

         DATE  ( MM/DD/YY )  01/17/86


T TIME                  STOP TIME
AR     HHMMSS     DAY OF YEAR     HHMMSS
-------------     ----------------------


       000000    181             010000


       000000    181             000000


RENCED TO JAN. 1, 1985 )
```

ORA 86

HELIOS
PHA TAPE EDITOR PROGRAM

The purpose of this program is to produce an output tape similar to the Helios PHA tape inputed into this program. The only difference between the input and output tape versions is that the output tape contains the corrected record end time and corrected start sequence number, start line number, end sequence number, and end line number.

The PHA Tape Editor Program generates a 9-track, 1600 BPI tape with the above-mentioned corrections. This tape is generated from a HELDRP-generated PHA tape on a one-for-one basis, i.e., one input tape generates one output tape. The PHA Tape Editor Program uses no external libraries or routines besides those normally provided by SYS1. FORTLIB and SYS2. FORTLIB.

The PHA Tape Editor consists of a MAIN program and four subprograms: FENTRY, FENTR5, LENTRY, and LENTR5.

This program utilizes one input card using a namelist called &TPELST. Included in the namelist are three variables:

Name	Format	Description
NUMITP	I*4	Number of input tapes to be edited. Defaults to 0; may not exceed five tapes.
DITAPE	A*8	Volume serial numbers of input PHA tapes. May not exceed five tapes.
DOTAPE	A*8	Volume serial numbers of output PHA tapes to be generated. Must equal the number of input tapes.

The variables corrected on the output tape are listed below and are found in the COMMON area PHAREC:

MSPNE	I*4	End time of data found within the current block of data.

Table 1. RATES Tape

(Subcom data for format group 1 - formats 1, 2, 3)

Displacement	QRNFM	ARNFM	Type		Description
0	1	1	I*2	1	Spin Rate (in RPM)
2	3	2	I*2		HET (E7A) temperature
4	5	3	I*2	2	VLET1 (E7B1) temperature
6	7	4	I*2		VLET2 (E7B2) temperature
8	9	5	I*2	3	LET (E7C) temperature
10	11	6	I*2		detector mounting plate temp.
12	13	7	I*2	4	X-Ray detector temperature
14	15	8	I*2		thermal blanket support plate 1 temp.
16	17	9	I*2	5	thermal blanket support plate 2 temp.
18	19	10	I*2		electronics temperature
20	21	11	I*2	6	base plate temperature
22	23	12	I*2		+12 v monitor
24	25	13	I*2	7	+6 v digital monitor
26	27	14	I*2		+6 v analog monitor
28	29	15	I*2	8	+7.75 v monitor
30	31	16	I*2		+4.7 v monitor
32	33	17	I*2	9	base plate temperature (front)
34	35	18	I*2		Power status (1=on, 0=off)
36	37	19	L*1		X-Ray Window Clock
37	38		L*1	10	X-Ray Window Data
38	39	20	L*1		Internal Calibrator A
39	40		L*1		Internal Calibrator B
40	41	21	L*1		X-Ray high voltage
41	42		L*1	11	Sector synchronizer
42	43	22	L*1		Force blackout mode
43	44		L*1		X-Ray sector data mode
44	45	23	I*2	12	X-Ray command reg.
46	47	24	I*2		X-Ray XEQ. reg.
48	49	25	I*2	13	Unsectored Rate Sequence ID (First Set)

Table 1. (continued)

Displacement	QRNFM	HRNFM	Type	Description
50	51	26	I*2	Sectored Rate Sequence ID (First Set)
52	53	27	I*2	Unsectored Rate Sequence ID (Second Set)
54	55	28	I*2	Sectored Rate Sequence ID (Second Set)

(14 words)

Name	Format	Description
NPNCLK	I*4	Spacecraft clock time, converted to a 4-byte storage word which contains the start sequence number within the first byte, the start line number, end sequence number, and end line number for the remaining three bytes.

Processing time depends upon the length of data residing upon the input volume. However, fifty PHA records will be edited in a half-minute of CPU time and 1 1/2 minutes I/O time. If more than one pair of input/output tapes are used, I/O time must be increased to cover tape mounting charges. The core requirement is 125K.

In addition to the output tape, a listing of the volume input and output numbers is generated. Also, a message indicating successful completion of the job is generated when appropriate, and error messages and abnormal terminations when appropriate.

```
// EXEC FORTRANH,PARM='MAP,XREF,ID'                                      0000010
//SOURCE.SYSIN DD *                                                      0000020




// EXEC LINKGO,REGION.GO=150K                                            0001270
//GO.FT11F001 DD DSN=HELPHA,UNIT=(9TRACK,,DEFER),VOL=SER=DUMMY,          0001290
// DISP=SHR,DCB=(RECFM=VB,LRECL=4376,BLKSIZE=8756),LABEL=(,SL,,IN)       0001300
//GO.FT12F001 DD DSN=HELPHA,UNIT=(9TRACK,,DEFER),VOL=SER=DUMMY1,         0001310
// DISP=SHR,DCB=(RECFM=VB,LRECL=4376,BLKSIZE=8756),LABEL=(,SL,,OUT)      0001320
//GO.SYSUDUMP DD SYSOUT=A                                                0001330
//GO.DATA5 DD *                                                          0001340
 &TPELST NUMITP=1,DITAPE='E03434',DOTAPE='E02202',    &END               0001350
```

HELIOS RATES TAPE EDITOR PROGRAM

The purpose of this program is to produce an output tape similar to the Helios RATES tape inputed into this program. The only difference between the input and output tape versions is that the output tape contains the corrected record end time and corrected start sequence number, start line number, end sequence number, and end line number.

The RATES Tape Editor Program generates a 9-track, 1600 BPI tape with the above-mentioned corrections. This tape is generated via this program from a HELDRP-generated RATES tape on a one-for-one basis; i.e., one input tape generates one output tape.

The RATES Tape Editor uses two external subroutines developed by G. Marandino of CSC. These two routines are RTRIM0 and RTRIM5. They currently reside on M2ZBGEM.SD002.WORKLIB. In addition, this program consists of a main program and four sub-programs FENTRY, FENTR5, LENTRY, and LENTR5.

The program utilizes one input card via a namelist called '&TPELST'. Included in the namelist are three variables:

Name	Format	Description
NUMITP	I*4	Number of input tapes to be edited. Defaults to 0; may not exceed 5 tapes.
DITAPE	A*8	Volume serial numbers of input RATES tapes; may not exceed 5 tapes.
DOTAPE	A*8	Volume serial numbers of output RATES tapes to be generated; must equal number of input tapes.

The variables corrected on the RATES output tape are listed below and are found in the RATES record COMMON area, RATREC:

Name	Format	Description
MSRNE	I*4	End time of data found within the current block of data.

Name	Format	Description
NRNCLK	I*4	Spacecraft clock time, converted to a 4-byte storage word which contains the start sequence number within the next three bytes, the start line, end sequence, and end line numbers.

Processing time depends upon the length of data residing upon the input volume. However, fifty RATES records will be edited in a half minute of CPU time and one and one-half minutes of I/O time. If more than one pair of input/output tapes are used, I/O time must be increased to cover tape handling charges. The core requirement is 150K.

In addition to the output tape, a listing of the volume input and output numbers is generated. Also, messages indicating errors in the namelist, abnormal program terminations and successful program completions, when and where appropriate.

Sept 3, 1976

The following are suggested modifications to the current mode of processing the Helios EDR tapes. The processing will now use a 6 step job to effect updating of the RATES and PHA data bases as well as of the associated summary data bases.

The action of the new HELDRP program with respect to updating data will be governed by the REPLACE option. If REPLACE is set to true the new data is written to two fresh output tapes and these are entered into the catalog with a notation indicating replacement. If the replace option is false the program searches the tape catalog to find a tape with the latest end time that is earlier than the start time of the current data. If there is sufficient room on this tape (i.e. 300 ft) the current data is written to the tape. When an end of tape (e.g. 2400 ft) is reached a new tape is loaded. At the end of the job step the catalog is updated & ~~the~~ written to disk.

The second job step then examines the current catalog. It first searches for replace notes and replaces data copying from two input to one output tape. It then searches the catalog for time overlaps

When a time overlap is detected. The tapes in question are mounted and merged to a single output tape if possible. Additional tapes are mounted as necessary. After each merge the catalog is internally updated and rescanned for overlaps. When no overlaps are detected the ~~ge~~ catalog is written to disk and the job step is terminated.

An additional optional step follows to pack the tapes as densely as possible. This scans the catalog to determine if any advantage can be gained by packing and copies the appropriate tapes to end as necessary. The catalog is updated as necessary

The fourth job step backs the disk catalog to a generation date group on 4 tape volumes.

The next, fifth, job step is a regular rates summary run.

The last, sixth, job step is a regular Pha summary run.

3/24

Details of Merge Specifications

The merge will proceed on the basis that the data in the database is valid as long as the Replace option is not specified. After selecting the correct tapes the primary tape is copied to the merge point then the times of the records are compared. If it is necessary short records (i.e. l C four pages) will be expanded to accomodate overlay data. All actual data that is in the primary d.b. will be retained. All fill data will be replaced by current data where there is overlap. All gaps will be filled if there is current data.

The replace option inserts the current data into the d.b. and eliminates already existing data covering that time period.

An additional delete option will delete any information in the d.b.

The merge pgm will also report all actions on the contents of the d.b. It will also maintain a machine readable copy of all d.b. management functions. (The comparison will be document ment by the ~~[illegible]~~ comparison routine.)

The compression algorithm will be very simple. A search from the front of the catalog looks at the length of each tape. If a tape has l.t. 2300 ft on it the length of the next tape is examined to see if it will fit on the previous tape. If the next tape is short enough it will be copied and the catalog will be updated to reflect this. When no further fills are possible the job step writes the catalog to disk and terminate. There will be a no check compress that will copy onto the first non full tape of the d.b. all subsequent tapes regardless of length and indicate this in the catalog.

August 12, 1976

TO: Earl Beard

FROM: Gerard Marandino

I have not as yet received a reply to your investigation of the problems with the Helios EDR tapes which were discussed in a telephone conversation about 2 weeks ago. As you recall, there was an apparent error of 100 seconds in the calculation of spacecraft event time from ground received time in the case of play-back data. There was also the problem of multiple (i.e., two) day boundary crossings in the first file of an EDR tape (Helios-A on day 119).

In addition to these several other questions have arisen in this interim:

(1) At what point was it determined that we would not receive command data after the telemetry data on the EDR tapes?

(2) A number of Helios-A tapes have been received with shipping letters marked "REDO". This marking stands in need of further clarification.

(3) An additional comment has appeared on the first line of the shipping letters. Typically this is "HS02", followed by "JPL" and a date. Exactly what does all of the information on this line mean?

(4) Is it possible to get the information that appears on the shipping letter in the additional format of punched cards? If so, would it be feasible to extend this back over the already-processed data?

Gerard Marandino

Gerard Marandino

GM:kg

cc: G. Muckel
Dr. N. Lal

September 28, 1976

MEMORANDUM

To: E. Beard

From: G. Marandino

I was pleased to learn of the success of your efforts in tracking down the problems we found in the EDR tapes. However, you have not indicated that you plan to correct these.

Our processing requires that the data on a single EDR tape be in strict time order, as was stipulated previously. Furthermore, the slips in the synchronization of the spacecraft clock can not be accomodated at our stage of reduction.

Finally, our spacecraft documentation indicates that there is to be no scientific data transmitted in distribution mode 4. The responsibility for this may well be with spacecraft operation, but it may be useful for the objection to flow through your channels as well.

Gerard Marandino

cc: N. Lal
R. Williams
M. Sandson
G. Muckel

F.A. Keipert, Chief
Information Processing Division

9/4/75

G.A. Muckel, Head
Data Management and Programming Office

Helios-A Support provided by IPD

Since the launch of Helios-A in December, 1974, IPD has been providing experimenter data record (EDR) tapes to this laboratory and other experimenters. In the interest of providing the lab scientists with the information they need to further their various research activities, this office processes these tapes as quickly as possible after receipt. It is also the responsibility of this office to insure the integrity of the data base thus established so that the scientific results reported to the scientific community can be presented with confidence.

During the last six months of Helios data processing analysis, members of this office have reported several major problems with these EDR tapes to the cognizant members of the IPD. The nature of these problems have the effect of raising the possibility that the data base integrity has been violated and the scientific results reported are in error. This could cause very serious problems if it is shown to be true.

In particular, the two major problems uncovered so far by the office are outlined below.

1. Several incidences have been found where the time difference between minor frames does not reflect the expected difference based on the bit rate and format indicated in the header at the beginning of the particular file. In each case found to date, the problem rectifies itself later in the file; however, the integrity of the erroneous data processed is questionable.

2. The bit rate and format indicated in the header record of each file provides information to our software to reveal the ratio at which our two types of scientific data (PHA and RATES) are transmitted. Several cases have been found where for a period of several major frames this ratio is lost. Either all rates data blocks are transmitted, or the data are transmitted at an erroneous ratio. This problem is extremely severe because much of the software logic is dependent upon the scientific data ratio being correct.

Another lingering problem involves an IPD software bug discovered and reported to IPD approximately two months ago. The problem involved a large number of minor frames being improperly added. It is our understanding that to date, this problem has not been corrected.

Although these problems have effects of much gravity, the members of your staff whith whom we have been dealing have been very slow to respond to our pleass of attention to these matters. These particular problems have cost us many man-hours of time, but of more concern is the lack of confidence we have in our data analysis results.

Gerald A. Muckel

CONCURRENCE:

James H. Trainor, Acting Chief
Laboratory for High Energy Astrophysics

GAM:gee

OPTIONAL FORM NO. 10
JULY 1973 EDITION
GSA FPMR (41 CFR) 101-11.6

UNITED STATES GOVERNMENT

Memorandum

[illegible]

TO : Distribution

DATE: October 3, 1975

X 6017

FROM : Mr. Earl Beard
Telemetry Computation Branch, 565.2

SUBJECT: Minutes of HELIOS Meeting with Dr. Trainor

A meeting was held on September 24, 1975, to discuss HELIOS EDR problems outlined in a memorandum from Mr. Muckel to Mr. Keipert. The three problems mentioned and their status are summarized below:

1. Minor frame period and bit rate indicator do not agree.

This problem was a result of erroneous input data (MDR) which was not detected in our processing. Dr. Trainor stated that since this condition was only noticed once, he would delete the file in his processing.

IPD will incorporate a check in its software to detect this condition in the future and request a redo from the source when it occurs.

2. Bit rate and format indicator do not agree with experiment data content.

Investigation into this problem has been delayed because the input tape used to create the EDR in question has been returned to GDC for reprocessing.

The original MDR has been requested, and the problem will be identified when the tape is received at IPD. Still waiting for Tape (German will regenerate) 11/10/75

3. Excessive fill data on the experimenter tape.

This problem results from an attempt by the Edit program to correct for a negative frame count jump on the MDR. When a negative frame count jump occurs, the major frame in process is padded out with fill data and the beginning of the next major frame is padded with fill data up to the frame where the negative frame count jump occurred. The frames following the jump are then processed in the new major frame.

A modification will be made to the Edit program which will discard the frame with the erroneous count and pad (fill data) that frame's position within the major frame being processed.

Jam / E Beard - 11/10/75 - 1, 3 still no go - [illegible] 11/11/75
To [illegible] [illegible]

Subject: Minutes of HELIOS Meeting with Dr. Trainor

The following items were also discussed at this meeting:

- o Dr. Trainor requested information on missing days of data for the Month of December 1974.

  The data referenced were contained on tapes (MDR) unprocessable by IPD. A redo of those MDR's has been requested from JPL and they will be processed and shipped to the experimenter when received.

- o Due to the small amount of data being received at the low bit rates, HELIOS experimenters will be requested to provide IPD with the least amount of frames acceptable for their processing. This would eliminate the cost and time involved in processing and shipping tapes to the experimenters which will not be processed.

  Thirty-two (32) frames at 8 bps is the minimum amount of data acceptable to Dr. Trainor for his processing.

  Data received at IPD with less than the minimum amount of frames will not be processed.

- o MDR's received by IPD of unacceptable quality (negative frame counts, negative times, redundant data, erroneous bit rates, etc.) will result in a redo request from the sender (JPL or GDC).

If the reprocessed tapes are not improved, IPD will attempt to salvage the data for the experimenters using the following philosophy:

a. If the time flags associated with each minor frame of data is "good" or "questionable but corrected," frames detected with negative times, negative frame counts, etc., will be deleted and fill data will replace the minor frame within the major frame of data.

b. Frames of data with the time flagged as "uncorrectable/bad" were not processed or shipped to the experimenters prior to this meeting. We will now attempt to process these data utilizing the above philosophy. A file of data including this quality may result in many short files of data on the experimenter tape. All data of this quality will be flagged bad, and the experimenter can determine their usefulness.

c. There will be no attempt to merge JPL and GDC data frames flagged bad; therefore, duplicate or negative time jumps between files of data on the EDR may result.

d. A Time vs. Frame count discontinuity (non-synchronous update between frame count and frame time increment) will cause termination of a file. A new file will be created using the data following the discontinuity.

e. Frames of data detected with obviously wrong bit rate indicators will be replaced with fill frames.

Attendees:

Mr. F. Keipert,	Code	560
Mr. C. Stout,	"	"
Mr. M. Mahoney,	"	565
Mrs. J. Stockwell,		"
Dr. J. Trainor,	"	663
Mr. W. Witt,	"	702
Mr. C. White	"	"

Earl Beard

Earl Beard
HELIOS Data Processing Engineer

565:5144M:EB:rb

C. Dickma

TECHNICAL DESCRIPTION OF GAMMA RAY BURST ADDITION TO HELIOS EXPERIMENT E-7

1.0. General

The Gamma Ray Burst (GRB) addition to the Helios E-7 Cosmic Ray Experiment will search for extremely sudden but short-duration increases in detector count rates associated with a wave-front of gamma rays emitted from exploding or imploding stars in the universe. As the wave-front passes Helios, charged particle detectors in E-6 and E-7 will count the individual photons associated with the wave-front. If the instantaneous increase in count rate is sufficiently high, subsequent count data for up to 64 seconds after detection of the event is stored in a solid state memory for subsequent readout to the S/C.

The GRB addition utilizes the large E-6 anti-coincidence scintillator and PM tube for one detector, and a somewhat smaller but thicker scintillator in the GRB package as a second detector. These pulses are applied to separate amplitude discriminators which produce logical pulses of constant amplitude for each input pulse exceeding the discrimination level. The discrimination level for each may be altered by ground command to compensate for detector variations and ambient cosmic ray flux variations during flight.

Pulses from the two amplitude discriminators may be used individually or logically OR'd together. The resultant pulses are counted in three separate counters for intervals of 4 mSec, 32 mSec and 256 mSec, respectively. At the end of each counting interval, the results are stored in a constantly recycling memory, and also compared with a reference threshold count value which is entered by ground command. If the total count value for any fast, medium or slow accumulation interval exceeds its individual reference count value, a gamma ray burst is defined to have occurred, and 255 consecutive additional counter readings for each of the three counters (fast, medium and slow) are entered into memory. Upon completion of the 255th slow interval (approx. 64 seconds after detection of the gamma ray burst event), all further operation of the GRB electronics ceases until the memory contents is readout to the S/C. The memory data will contain the exact time of detection of the gamma ray burst event (in arbitrary units) derived from an interval 4 1/2 year calendar, which counts the 32 KHz S/C OP CLOCK, 255 consecutive readings of the fast, medium and slow counters prior to the event, and 256 readings of each of the counters subsequent to the event. Thus, a complete time history of the individual counter data both before and after detection of a gamma ray burst can be assembled, and the exact time of detection (to within 4 mSec) can be determined.

There is a great deal of command flexibility within the GRB addition which permits adjustment of the pulse amplitudes which will be detected (discriminator level), adjustment of the reference count value constituting a gamma ray burst threshold, automatic or by-command-only dump of memory, two internal self-check modes, individual selection of the E-6 or E-7 sensor signals, and other related functions.

2.0. Integration into E-7 Cosmic Ray Experiment and Changes in CRE Operation

The GRB addition is mounted on the top of E-7 electronics box and adds 3.050 inches to the total height. The width is reduced by 0.40 inch on each side, and is arranged so that the GRB may be mounted on top of E-7 after E-7 is mounted in the S/C.

The only change in electrical interface is the addition of OP CLOCK 1 (32 KHz) from the S/C, and of course the additional power (∿1.0 watt). All commanding is done using the existing X-ray clock and X-ray data commands, and all data is transmitted in 48-bit blocks within the normal data stream. Additional ID bit checking to distinguish between PHA data and GRB data is required.

3.0. GRB Data Formats

The GRB addition transmits all data within the 48-bit blocks already assigned to E-7. GRB housekeeping (HK) data is present on a regular basis, and will occur in place of the first PHA block following a rate line #1 block for even numbered unsectored rate sequences (URS ID) only. There are four distinct types of GRB HK blocks. Memory dump data is present only after detection of a gamma ray burst, and will be transmitted in place of all PHA data following any GRB HK block and continuing until memory dump is complete (512 48-bit blocks).

The four types of GRB HK blocks are shown in Figure 3.1a. These blocks are uniquely identified by Bits 48, 38 and 37 being zero. The type of HK data in each block is identified by Bits 43 and 44. The remaining data quantities are as follows:

3.0.1 Bit 39, HK0. The A bit designates whether or not the A sensor is enabled as gamma ray burst detector. The A sensor corresponds to the TBD scintillator.

3.0.2 Bit 39, HK1. The B bit serves the same function as the A bit, above, but corresponds to the TBD scintillator.

3.0.3 Bit 39, HK2. The AUTO bit, when a "1," indicates that memory dump will occur automatically beginning with the first non-rate block to follow a GRB HK block. Automatic memory dump will occur only after completion of a memory load cycle (64 seconds) resulting from detection of a gamma ray burst. If AUTO=0, all data associated with a burst will remain in memory until completion of a memory dump initiated by ground command.

3.0.4 Bit 39, HK3. The R01 bit = 1 indicates that memory dump will terminate after one complete readout cycle (512 48-bit blocks). When R01=0, memory readout is repeated to provide a redundant dump to prevent loss of data.

3.0.5 Bits 40-42. The trigger counter is a modulo-8 counter which is imcremented each time a gamma ray burst is detected. It is never reset. This counter is used to indicate if a burst occurred during a time when the S/C was out of view of a ground station, and is used in conjunction with the AUTO mode to determine when a memory readout should be commanded.

3.0.6 Bit 46. The parity bit is 1=odd number of "1's" in the previous 48-bit GRB block. Parity appears in both HK and memory data and always corresponds to the previous GRB block, regardless of type (HK or M).

3.0.7 Bits 1-36, HK0. These bits contain three 12-bit rate data words for one randomly chosen 4, 32, or 256 mSec accumulation interval. Knowledge of these counts is used to help determine an appropriate reference threshold for detecting a gamma ray burst. The LSB is in Bits 1, 13 and 25 for the slow, medium and fast counters, respectively. Each counter data is only 11 bits (i.e. Bits 1-11, 13-23 and 25-35, respectively). The 12th bit in each field is either an overflow bit, or a trigger ID bit. Overflow is unambiguously indicated by a 1 in the 12th bit and all zeros in the preceeding 11 bits. Trigger ID appears as a "1" when the present count exceeds the trigger threshold for that rate counter.

3.0.8 Bits 1-36, HK1. These bits contain the three 12-bit command data words which establish the reference thresholds for detecting a gamma ray burst. The contents of each of the slow, medium and fast counters is compared with their respective threshold levels and trigger a memory load cycle when any one of the thresholds is exceeded. The LSB of each word is in Bits 1, 13 and 25, respectively, and only the first 11 bits are used. The 12th bit in each 12-bit field is not used.

3.0.9 Bit 1, HK2. The PWR bit is a status bit which indicates if power to E-7 has been interrupted since the previous memory readout. When E-7 is first turned on, this bit is set to a "1" and will readout a "1" until completion of the first memory dump. This bit is used to verify no interruption of power input which might affect the integrity of the internal 35-bit calendar counter. A long sequence of readings of the S/C clock and the GRB clock are necessary to obtain absolute calibration of the GRB clock.

3.0.10 Bits 2-36, HK2. These bits represent the state of the 35-bit calendar counter. Bit 2 is the LSB and has the weight 4.0 mSec. This time base is derived from the S/C OP CLOCK, scaled by 128. Bit 3 is the 8 mSec bit, etc., up to Bit 36, which has the weight 68, 719, 476.84 seconds, or about 795 days.

3.0.11 Bits 1-18, HK3. These bits represent the number of events above threshold from the A detector since the last HK3 line. In contrast to the rate data in Line HK1, this data is over a significantly longer time base, is A counts only, and is not zero when A is disabled by command. LSB is in Location 1. MSB is in Location 18.

3.0.12 Bits 19-36, HK3. These bits represent the same data from Detector B as described above for Detector A. LSB is Bit 19, MSB is Bit 36.

3.1. GRB Memory Data

The GRB addition contains 3 512x12-bit memories for storing the count data accumulated during the 4, 32 and 256 mSec intervals. While searching for a gamma ray burst, all count data is continuously being stored in locations 256-511, with the oldest data being replaced by newest data. Hence there ~~is~~ are always 256 continuous data entries to provide a history of the last 64 seconds. When any one of the 3 thresholds is exceeded, a gamma-ray burst is detected and a "1" appears in the 12th bit of that rate data and the trigger counter is incremented by one. The data that caused the trigger is stored with the precursor data somewhere in the upper half of memory. Immediately, the state of the calendar counter is entered into address 0. The 255 succeeding count data are stored in their respective memory locations; thus filling the lower half of memory. No further memory entries are allowed until completion of memory readout, which in AUTO mode begins with the first 48-bit PHA data block following the next HK line. GRB memory data takes the place of all PHA data until completion of readout. When AUTO is disabled, memory readout may be initiated by ground command.

The data format for memory data is shown in Fig. 3.1b and contains the following information:

3.1.1 Bits 1-12. These bits contain the 11 bits of data from the slow (256 mSec interval) counter. Bit 1 is LSB. The 12th bit is either an overflow bit (in which case the 11 data bits are all zero), or a trigger indicator denoting that the count in Bits 1-11 exceeded the threshold for that counter. This is identical to the Rate Data in Line HK0.

<u>NOTE</u>: The first memory readout block only uses Bits 1-36 for PWR and calendar time of a gamma ray event in the same format as used in Line HK2.

3.1.2 <u>Bits 13-24</u>. Identical to the above, but corresponds to the medium (32 mSec) counter. LSB is Bit 13, MSB is Bit 23, and overflow/trigger is Bit 24.

3.1.3 <u>Bits 25-36</u>. Identical to the above, but corresponds to the fast (4 mSec) counter. LSB is Bit 25, MSB is Bit 35, and overflow/trigger is Bit 36.

3.1.4. <u>Bits 37, 38</u>. These are ID bits and always have the values 0,1 for memory data.

3.1.5. <u>Bits 39-45</u>. These bits form part of the current address from which memory data is being read out. The 2^0 and 2^1 bits are missing, so the address increments every fourth memory block.

3.1.6. <u>Bit 46</u>. This is the parity check bit and has the same function as in HK blocks.

3.1.7. <u>Bit 47</u>. This bit provides a one-bit-at-a-time repetition of the 36-bit calendar time field that is transmitted in the first memory block. The first block thus contains Bit 1 of the 36-bit field, or PWR. The next block contains the 4 mSec-weighted calendar bit, etc. This process continues throughout the entire 512 (or 1024) block readout cycle, and hence repeats the 36-bit field 14 times. In the event the first memory block is lost, reconstruction of the event time is possible using this bit in conjunction with the readout address counter and S/C frame counter.

4.0. GRB Commands

All commands to the GRB addition are entered via the existing E-7 X-ray Clock and X-ray Data Commands (C005 and C372). To provide command isolation between the existing X-ray system and the gamma-ray burst system, an ID bit and an enable bit have been added to the command field. In addition, the GRB command structure has been set up to utilize either 5-bit or 12-bit fields, whereas the X-ray system uses an 8-bit field.

4.1. X-Ray System Commands

This system is essentially the same except that the last (spare) bit must be loaded with a "0" to be accepted by the X-ray system, and the data input flip-flop must be "1" (i.e. enabled). The remaining bits are as previously assigned. Execution of the command is still in response to the on→off transitions of CAL A.

4.2. Five-Bit GRB Commands

The GRB configuration commands (i.e. all commandable functions except threshold adjustments) are all entered as 5-bit serial commands. The last bit sent must be a "1" to be accepted as a GRB command, and, as above, the data input flip-flop must be a "1" to enable execution of the command. The remaining 4 bits are used to set up an address (1 of 16) designating a specific function to be controlled. The first bit transmitted is the most significant bit (i.e. weighted 2^3), the fourth is the LSB (weighted 2^0). The sixteen functions are decoded as follows:

ADDRESS	FUNCTION
0	Enables Detector A allowing these detector signals to be accepted by the fast, medium, and slow rate counters. Also, the A detector must be enabled to allow the A discriminator to be affected by command address 15.
2	Disables Detector A (i.e. resets Command 0).
4	Enables Detector B in the same way Command Address 0 enables Detector A.
6	Disables Detector B (i.e. resets Command 4).
8	Turns AUTO mode ON allowing event data to be read out automatically.
10	Turns AUTO mode OFF. Memory readout is then by command only.
12	Starts internal test mode at beginning of next 64-second period. Test mode is reset automatically at completion of sequence.
14	Starts internal test mode as above, but in addition causes all data to be inverted prior to being written into memory. Only memory data (Bits 1-36) are affected. Used for testing all memory locations with both "1's" and "0's." Test mode is reset automatically at completion of sequence.
1	Initiates memory readout. Memory data will appear in place of PHA data in first block following next GRB HK block.
3,5,7	These addresses specify 12-bit command fields for establishing reference count thresholds for the fast, medium and slow counters, respectively. This sets the threshold level which defines a gamma-ray burst. See Section 4.3.
9	This command has two functions: if memory readout is in progress, it will terminate readout. This provides an escape from a possible failure mode which continuously requests memory readout. If memory readout is not in progress, this command injects 48 pulses into each of the two upper 12-bit counters of the 36-bit calendar counter. This provides a check of those counter stages which might not be exercised during normal test sequences of less than a day.

ADDRESS	FUNCTION
11	This command sets the R01 readout mode, allowing one complete memory dump (512 blocks).
13	This command resets the R01 mode, enabling two memory dumps (1024 blocks) for redundancy.
15	This command may increment either or both of two three-stage counters which select the pulse amplitude discrimination level for the A and B detectors. The counters to be advanced are determined by the A and B enable bits (Command Addresses 0 and 4).

4.3. Twelve-Bit GRB Commands

As noted above, Command Addresses 3, 5 and 7 are used to specify 12-bit fields for commanding the fast, medium and slow threshold levels. When these addresses are decoded, an extended shift register which remembers the previous 7 bits is referenced, and the contents transferred to the appropriate threshold register. The 7 bits contain 6 data bits and a single routing bit to designate whether the data bits refer to the upper or lower half of the threshold. The first bit sent is the LSB of the six-bit binary number to become part of a threshold. The 7th bit sent designates the upper (if "1") or lower (if "0") half, and the next 4 bits are the command address, transmitted MSB first. The last bit transmitted (12th) must be a "1" to designate the command as a GRB command rather than an X-ray system command.

4.4. Command Sequences

Figure 4.4 depicts the various digital command formats that are used with E-7 and E-7/GRB. When sending digital commands, it is always safer (but not necessary) to preceed a sequence of DATA and CLOCK commands with a single C005 to guarantee starting with a known state of the data input flip-flop preceeding the command shift registers. After sending the C005 (reset) command, each bit is sent sequentially. A "1" is entered by sending C372 followed by C005, and a zero is entered by sending C005 alone. After having sent the last bit, the data input flip-flop must be toggled to the "1" state with C372 to enable execution of the command by the CAL (C026) commands. The data input flip flop is reset by either C026 or C005, and therefore only one execution is possible without setting the data input flip-flop again.

For example, suppose we wish to set the lower half of the Fast threshold in GRB to 46_{10}. This means that the address must be set to 3, the upper/lower bit to 0, and the binary equivalent of 46_{10} in the first 6 bits. The sequence will then be:

C005	Clears data input flip flop	
C005	Enter 0 for 2^0	Data = 46_{10}
C327,C005	Enter 1 for 2^1	
C372,C005	Enter 1 for 2^2	
C372,C005	Enter 1 for 2^3	
C005	Enter 0 for 2^4	
C372,C005	Enter 1 for 2^5	
C005	Enter 0 for lower half	
C005	Enter 0 for 2^3	Address = 3
C005	Enter 0 for 2^2	
C372,C005	Enter 1 for 2^1	
C372,C005	Enter 1 for 2^0	

C372,C005	Directs command to GRB, not X-ray system
C372	Toggles data input flip-flop to "1" to enable command execution

The command is then executed on the next CAL A ON→CAL A OFF transition by transmitting at least two C026 commands. The execution will also reset the data input flip-flop.

5.0. Processing and Display Requirements

All GRB data appears in place of PHA data and should be included in the line-by-line part of the printout as it appears in the data stream. Processing of the first 36 bits of memory data, HK0 and HK1 data is similar to that already in use for PHA data, except that the bit order in each 12-bit field is reversed. For all GRB data, LSB is transmitted first and appears on the left of each data field (see Fig. 3.1), whereas all data from the E-7 Cosmic Ray Experiment is transmitted MSB first. Each of these quantities should be converted from binary to the decimal equivalent and printed. HK2 data, which is also transmitted LSB first, should display the PWR bit separately as a "1" or "0" and the remaining bits displayed either octally or in decimal, but preferably re-ordered right to left so that the least significant digit is displayed on the right. Separation of the calendar number into several 4-digit groups would improve readability. Conversion to absolute time units is not desirable.

HK3 data (Bits 1-36) should be processed to display the decimal equivalents of the two 18-bit binary numbers. The Accum. A and B data provide the only statistically significant background rate information available during ground test. Consequently, this data should not only be displayed as decimal integers representing total counts, but should also appear in the summary printout as a rate (counts/second). The accumulation interval is the period between HK-3 data lines, or 432 seconds at 2048 FMT1.

The tag bits (Bits 37-48) of all GRB blocks must be processed with algorithms to separate the individual parameters appropriately. Parity bits may be simply printed as 1 or 0. The HK ID bits should be converted to decimal (0-3) and printed to provide line ID. The trigger counter data (bits are LSB first) should also be converted to and printed. The A, B, AUTO and R01 modes can be identified with appropriate lables, such as : A/NOTA, B/NOTB, AUTO/MAN, and R01/R02 for "1's" and "0's," respectively. The ID bits in Positions 37 and 38 need not be printed.

For memory blocks, the memory address should also be converted to decimal and printed, and the calendar time bits (#47) simply listed as they appear. The 36-bit time word can be more easily reconstructed by hand for checkout of this function, rather than by computer, since all address bits necessary to identify each time bit are not transmitted.

All references to "1'" and "0's" in the above refer to logical levels of 0.4 volts (for a "1") and >2.7 volts (for a "0") at the S/C Exp. interface.

6.0. Test Procedure

When power is first applied, the GRB turns on with all commandable functions in a known state. These are as follows:

1. Both A and B sensors are enabled.
2. AUTO mode on.
3. RO1 mode on.
4. Self-test off.
5. Each 3-bit analog discriminator is reset to 000.
6. Each reference threshold is preset to 32 counts.

The first step of a short checkout will be to turn on the self-test mode (send Function Command 12) with all other commandable functions in their turn-on state. It is desirable to synchronize the time of this command so that gamma-ray burst data will be stored early in the Action 1 period and memory readout will begin during Action 1. Between 64 and 128 seconds after receipt of command is required to complete the memory read-in, and readout will begin within 108 seconds (in 2048 FMT 1) of the completion of memory read-in. The memory readout will require 614 S/C frames (at one 48-bit block per frame) or ∿346 seconds. Five-sixths of these blocks will be GRB memory data, the remainder will be E-7 Rate data blocks. It will be necessary to extend the period of time that line-by-line printout is allowed (but not the time interval during which E-7 rate data is accumulated for the summary printout), to complete the memory dump. Completion of memory readout (MRO) can be detected by either monitoring the memory address contents (allowing for 1024 readout blocks if RO2 mode is enabled), or by looking for a real PHA block, since no PHA data is allowed to be interspersed between GRB memory data blocks.

The printout would then show E-7 data in its usual format, including PHA data, for the first few minutes of line-by-line data, and perhaps one or more GRB HK lines. When MRO begins, we would then see all PHA data eliminated and the GRB data in its place with the memory address incrementing each fourth block. The precurser memory data would show which of the fast, medium or slow counters exceeded its threshold first, and each succeeding memory location would show an increased count up to overflow.

The next step (i.e. prior to the second Action) would be to reconfigure several features of the GRB package prior to a second self-test. The new mode to be established is:

1. AUTO mode off (send Function Command 8).
2. Reload the Medium and Slow threshold registers with the values 1280 and 35, respectively, by sending the following commands:
   a. For the Med Register, send:

C005	Clear data input flip flop	
C005	Enter 0 for 2^0	= 20 X 64 = 1280
C005	Enter 0 for 2^1	
C372,C005	Enter 1 for 2^2	
C005	Enter 0 for 2^3	
C372,C005	Enter 1 for 2^4	
C005	Enter 0 for 2^5	
C372,C005	Enter 1 for U	Upper half of register
C005	Enter 0 for 2^3	Address = 5 for Med. Reg.
C372,C005	Enter 1 for 2^2	
C005	Enter 0 for 2^1	
C372,C005	Enter 1 for 2^0	

C372,C005	Enter 1 for GRB
C372	Set data flip-flop = 1
C026	Execution of Command
C026	

b. For the Slow Register, send:

C005	35 counts
C372,C005	
C372,C005	
3 X C005	
C372,C005	
C005	Lower Half
C005	Address = 7
C372,C005	
C372,C005	
C372,C005	
C372,C005	GRB Bit = 1
C372	Data flip-flop = 1
C026	
C026	

3. Increment both discriminator counters by sending Function Command 15.
4. Initiate the self-test with data inverted by sending Function Command 14.

During the time the GRB is storing its self-test data in memory, the usual X-ray offset commands may be sent to the X-ray system. Then, shortly after the second action has been started (enough PHA data should be acquired to give a good idea of the PHA distributions), a manual memory readout should be requested by sending Function Command 1. As for the first action, an extended period of line-by-line printout is required to list all GRB memory data (approximately 2 1/2 to 3 minutes longer).

The above sequence is to be in addition to the usual E-7 IST-1 sequences, and must be integrated into the procedure.

For IST 2, the above tests which provide a memory dump with normal GRB data and a second memory dump with inverted GRB data should be included in the first two Actions (the ones at the highest bit rates). For each additional Action normally performed for the E-7 Cosmic-Ray Experiment, the GRB analog discriminator settings should be lowered by sending a single Function Command 15 prior to each Action (actually, immediately following completion of the previous action). This enables a determination of the Detector A and Detector B background rates as a function of several discriminator settings. No additional memory dumps beyond the first two are required.

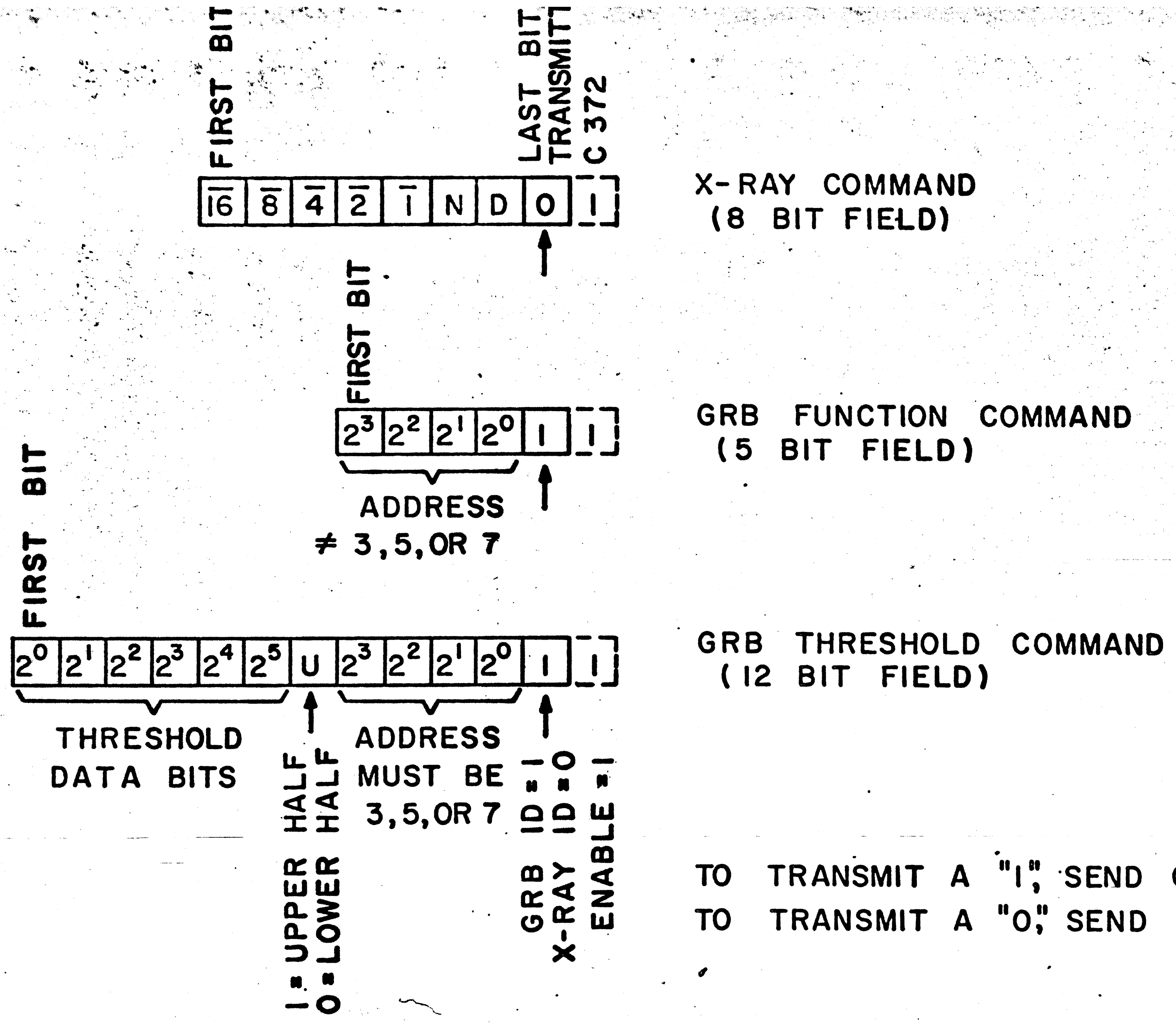

TO TRANSMIT A "1," SEND C372, C005

TO TRANSMIT A "0," SEND C005

FIGURE 4.4

3.1 a HOUSEKEEPING DATA

HK TYPE	BIT NUMBER														
	1 – 12	13 – 24	25 – 36	37	38	39	40	41	42	43	44	45	46	47	48
0	RATE (SLOW)	RATE (MED)	RATE (FAST)	0	0	A	2^0	2^1	2^2	0	0	0	P	0	0
1	THRESHOLD(S)	THRESHOLD(M)	THRESHOLD(F)	0	0	B				1	0	0	P	0	0
2	PWR CALENDAR TIME (35 BITS)			0	0	AUTO				0	1	0	P	0	0
3	ACCUM. A(18 BITS)		ACCUM. B(18 BITS)	0	0	ROI				1	1	0	P	0	0

γ-RAY ID

HK/MEM ID

MODE

TRIGGER COUNTER

HK TYPE ID

Analog Disc. B43
~~NOT USED~~

PARITY

Analog Disc. B44
~~NOT USED~~

γ-RAY / PHA ID $\equiv 0$

MEMORY ADDRESS

CALENDAR TIME

3.1 b MEMORY DATA

BIT NO.	1 – 12	13 – 24	25 – 36	37	38	39	40	41	42	43	44	45	46	47	48
	M (SLOW)	M (MED)	M (FAST)	0	1	2^2	2^3	2^4	2^5	2^6	2^7	2^8	P	T	0

FIGURE 3.1

3.1 a HOUSEKEEPING DATA

HK TYPE	BIT NUMBER														
	1-12	13-24	25-36	37	38	39	40	41	42	43	44	45	46	47	48
0	RATE (SLOW)	RATE (MED)	RATE (FAST)	0	0	A	2^0	2^1	2^2	0	0	0	P	0	0
1	THRESHOLD(S)	THRESHOLD(M)	THRESHOLD(F)	0	0	B				1	0	0	P	0	0
2	PWR¦ CALENDAR TIME (35 BITS)			0	0	AUTO				0	1	0	P	0	0
3	ACCUM. A (18 BITS)	ACCUM. B (18 BITS)		0	0	ROI				1	1	0	P	0	0

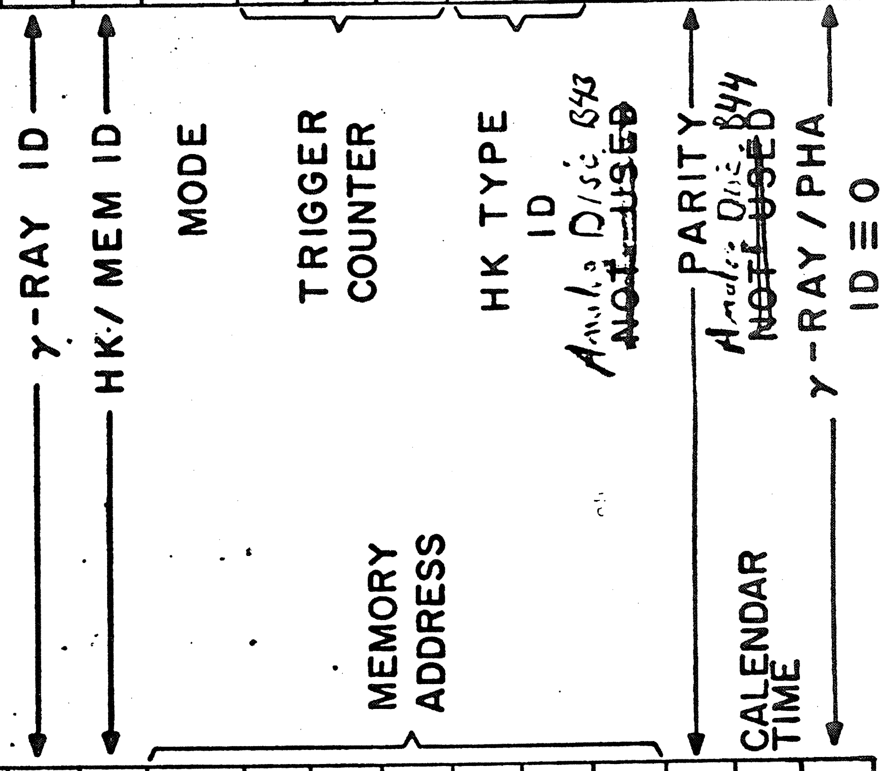

3.1 b MEMORY DATA

BIT NO.	1-12	13-24	25-36	37	38	39	40	41	42	43	44	45	46	47	48
	M (SLOW)	M (MED)	M (FAST)	0	1	2^2	2^3	2^4	2^5	2^6	2^7	2^8	P	T	0

FIGURE 3.1

Institut für Reine und Angewandte Kernphysik
der Christian-Albrechts-Universität Kiel
R. Müller-Mellin

23 Kiel, den 6/28/76
Olshausenstraße 40/60 Gebäude N 20 a
Fernschreiber 292979 ifkkl
Telefon: Sammel Nr.: 8801
bei Durchwahl: 880-

To
DR. NAND LAL
CODE 663
NASA GSFC
GREENBELT, MARYLAND 20771
USA

Dear Nand,

enclosed please find dumps of an example with a correct time tag for the space craft event time in DM7 and of an example, where memory read outs were treated as if they were real time data.

To my knowledge this happened *only* when JPL was responsible for the MDR production.

I learned from GSOC today, that JPL is rerunning the jobs picking out only the DM7 files and applying the correct time tag, leaving to the experimenter the responsibility to merge the corrected files into his dataset.

I don't care for those corrected files, as I compute my own S/C event time out of the S/C clock using the formula

SET [SECONDS] = 1.000002486 * S/C CLOCK - 4289586.856 .

This is only valid in 1975 but before there were no DMT read outs anyway (except for shock data).

Maybe this letter is of some help for you and I hope your work is doing progress.

Best regards

Yours sincerely

Reinhold

204

Roger x5668

HELIOS A
EXPERIMENTER 7
EDR

NOV 27 1973

GENERAL INFORMATION

- AN EDR WILL CONSIST OF TWO (2) TAPES
  TLM TAPE
  ORB/ATT TAPE
- THE FORMAT OF THE TLM EDR WILL CONSIST OF ONE PHYSICAL FILE OF MUTIPLE TELEMETRY RECORDS
- THE TLM EDR WILL BE 9 TRACK 1600 BPI
- THE END OF TAPE WILL BE INDICATED BY THREE (3) PHYSICAL END OF FILE MARKS
- A NEW LOGICAL FILE (HEADER PRECEEDING THE RECORDS) WILL BE CREATED AFTER
  (1) AN END OF DAY
  (2) CHANGE IN BIT RATE
  (3) CHANGE IN FORMAT
- EACH LOGICAL FILE OF DATA WILL BE PRECEEDED BY A LABEL. ALL LABELS ON THE TLM EDR WILL BE THE SAME SIZE
- EVT (ON TELEMETRY FRAMES) IS THE TIME OF THE EVENT OF THE FRAME OF DATA AT THE SPACECRAFT IN MILLISECONDS OF DAY
- GMT IS THE GROUND RECEIVE TIME (MILLISECONDS OF DAY) OF THE FIRST BIT OF THE TELEMETRY FRAME AT A SPECIFIED STATION (DSS)
- MISSING FRAMES OF DATA WILL BE INDICATED BY A 1 BIT IN BIT 6 OF THE S2 STATUS INDICATOR
- FRAMES OF MISSING DATA WILL BE FILLED WITH ZEROS
- FILL THAT IS USED TO COMPLETE A RECORD OR A FRAME WILL BE BINARY ONES
- ENGINEERING DATA WORD POSITIONS WILL REMAIN CONSTANT THRU OUT THE EXPERIMENTER FRAME OF DATA. ENG WORDS WILL RETAIN THEIR LAST VALUE UNTIL A NEW VALUE IS ENCOUNTERED
- EDR,S WILL BE ORDERED ON SPACECRAFT (S/C) EVENT TIME (EVT) IF NO S/C EVT EXISTS FOR A MINOR FRAME OF DATA, THAT FRAME WILL BE DISCARDED
- DATA FROM THE TWO NETWORKS WILL BE MERGED ON THE EDR,S
- EXPERIMENTER 7 WILL RECEIVE DATA ONLY IN FORMATS 1,2,3,5

DEC 6 1973

HELIOS A
EDR
TELEMETRY LABEL
FORMAT

This label will preceed all files on the TLM EDR. The label will consist of 78 characters

A	1 - 7 + Space	International Code
B	9 -11 + Space	Tape Type (TLM or ORB)
C	13 -15 + Space	Data Type (TLM or CMD)
D	17 + Space	Format Number
E	19 -22 + Space	Bit Rate
F	24 -25 + Space	Year of Recording (last 2 digits)
G	27 -29 + Space	File Start Time (Day)
H	31 -36 + Space	File Start Time (HHMMSS)
I	38 -40 + Space	File Stop Time (DAY)
J	42 -47 + Space	File Stop Time (HHMMSS)
K	49 -52 + Space	Master Data Tape Number
L	54 -55 + Space	Master Data Tape File
M	57 -62 + Space	Date EDR generated (YYMMDD)
N	64 -66 + Space	EDR Run Number
O	68 -69 + Space	EDR File number
P	71 -72 + Space	EDR reel number
Q	74 -76	Experimenter ID
	77 78	Spares

Labels written on seven (7) track tape will be written in IBM BCD Format, odd parity.

Labels written on nine (9) track tape will be written in EBCDIC.

Figure 3

IDATA(4,K)

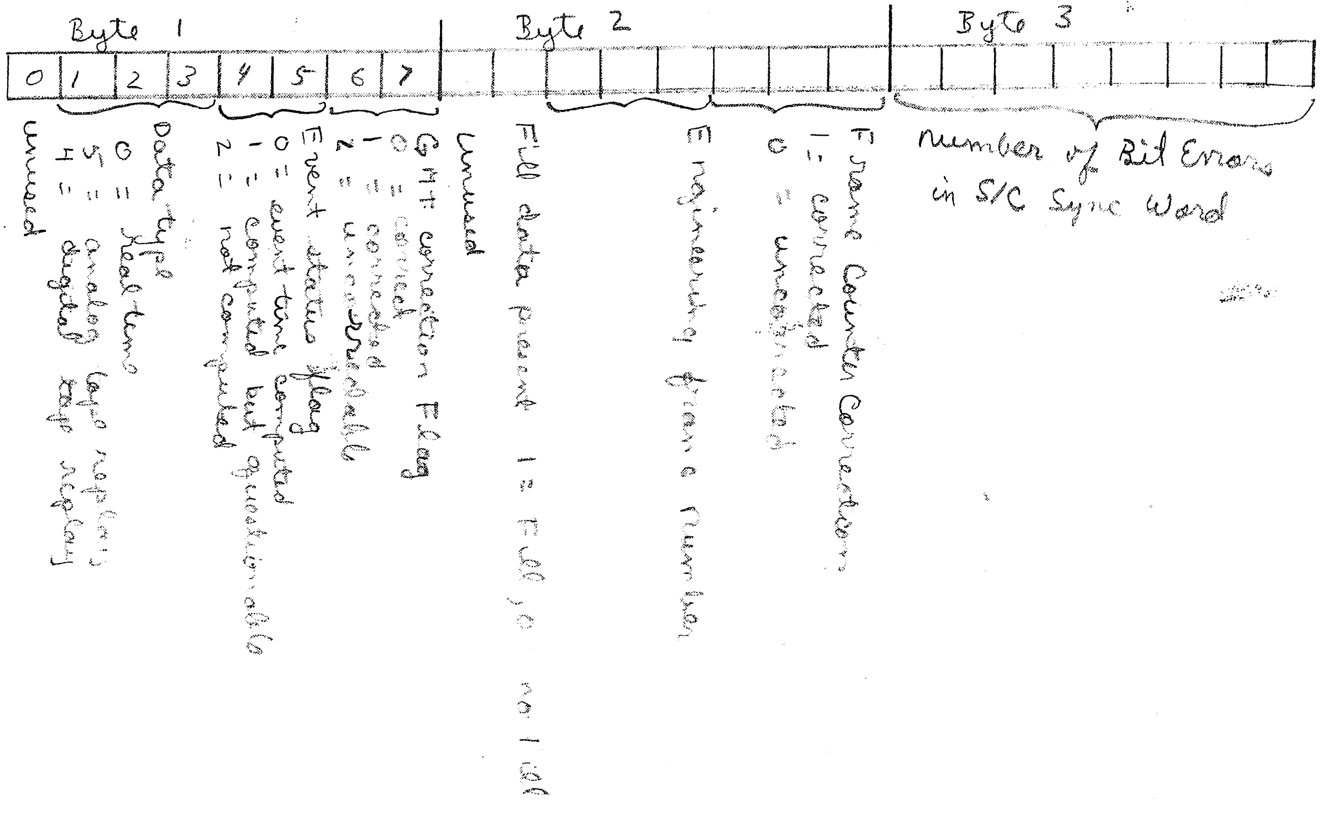
Byte 1
Byte 2
Byte 3
0
1
2
3
4
5
6
7
unused
Data type
0 = Real time
5 = analog tape replay
4 = digital tape replay
Event status flag
0 = event time computed
1 = computed but questionable
2 = not computed
GMT correction Flag
0 = correct
1 = corrected
2 = uncorrectable
unused
Fill data present 1 = Fill, 0 no Fill
Engineering frame number
Frame Counter Correction
1 = corrected
0 = uncorrected
Number of Bit Errors
in S/C Sync Word

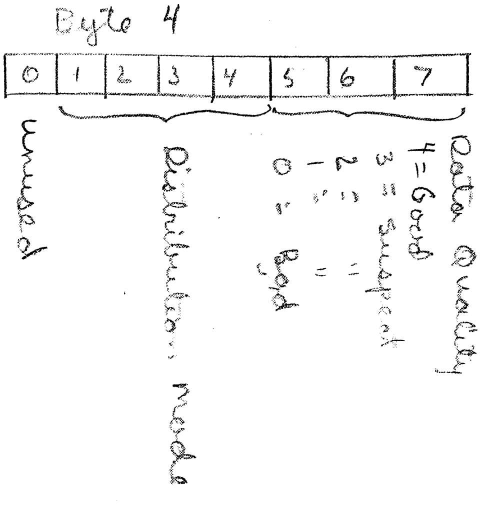
Byte 4
0
1
2
3
4
5
6
7
unused
Distribution mode
Data Quality
4 = Good
3 = suspect
2 = "
1 = "
0 = Bad

bytes numbered left to right E7

DEC 9 1974

IDATA(4,K)

HELIOS A
EDR
FRAME STATUS INDICATORS

			Bits	word Bit #	position
	S1 (Byte 1)				
(4)	GMT Time Correction Flag				
	Correct	0	1–0	6-7	3
	Corrected	1			
	Uncorrectable	2			
(2)	Event Time Status Flag		3–2	4-5	2
	Event time computed	0			
	Computed but questionable	1			
	Not computed	2			
(6)	Data Type		6–4	1-3	1
	Real time	0			
	Analog tape replay	5			
	Digital tape replay	4			
	S2 (Byte 2)				
(7)	Frame Counter Correction		2–0	13-15	6
	Corrected	1			
	Uncorrected	0			
(8)	Engineering Frame Number		5–3	10-12	5
	Fill Data Present		6	9	4
	Fill	1			
	No fill	0			
	S3 (Byte 3)				
	Number of Bit Errors in S/C Sync Word		7–0	16-23	7
	S4 (Byte 4)				
10	Data Quality		2–0 5-7	29-31	9
	Data is Good	4			
	Data is Suspect (SNR below minium requirement)	3			
	Data is Suspect (errors in HSD block)	2			
	Data is Suspect (SNR below minimum requirement and errors in HSD block	1			
	Data is Bad (non synced, or deleted frame	0			
11	Distribution Mode		6–3 ← 1-4	25-28	8

what is the bit # in this byte

Note: Bits are numbered right to left within the byte (7–0)

NOV 27 1973

HELIOS A

EXPERIMENTER 7

EDR

FORMAT 3

	DESCRIPTION	BYTES	
EVT	S/C EVENT TIME	4	
GMT	GROUND REC'D TIME	4	8
FN	FRAME NUMBER	2	10
TI	SPACECRAFT CLOCK	2	12
SI	STATUS INDICATORS	4	16
LT	ONE WAY LIGHT TIME	4	20
8 -13	SCIENTIFIC DATA	6	
80-85	SCIENTIFIC DATA	6	
*11	ENGINEERING DATA	1	
*16-17	ENGINEERING DATA(SPIN RATE)	2	
*28	ENGINEERING DATA	1	
*40-45	ENGINEERING DATA	6	
*64-69	ENGINEERING DATA	6	
*88-89	ENGINEERING DATA	2	
FILL	FILL ONES or Day	2	
		52	

* ENGINEERING DATA WORDS

SAME AS FORMAT 1

NOV 27 1973

HELIOS A

EXPERIMENTER 7

EDR

FORMAT 2

	DESCRIPTION	BYTES	
EVT	S/C EVENT TIME	4	
GMT	GROUND REC'D TIME	4	8
FN	FRAME NUMBER	2	10
TI	SPACECRAFT CLOCK	2	12
SI	STATUS INDICATORS	4	16
LT	ONE WAY LIGHT TIME	4	20
8 -13	SCIENTIFIC DATA	6	26
80-85	SCIENTIFIC DATA	6	32
*11	ENGINEERING DATA	1	33
*16-17	ENGINEERING DATA(SPIN RATE)	2	35
*28	ENGINEERING DATA	1	
*40-45	ENGINEERING DATA	6	
*64-69	ENGINEERING DATA	6	
*88-89	ENGINEERING DATA	2	
FILL	FILL ONES or Day	2	
		52	

* ENGINEERING DATA WORDS

SAME AS FORMAT 1

NOV 27 1973

HELIOS A

EXPERIMENTER 7

EDR

FORMAT 1

		DESCRIPTION	BYTES	
①	EVT	S/C EVENT TIME	4	
②	GMT	GROUND REC'D TIME	4	
⑫	FN	FRAME NUMBER	2	
⑬	TI	SPACECRAFT CLOCK	2	
	SI	STATUS INDICATORS	4	13-16
③	LT	ONE WAY LIGHT TIME	4	20
	8 -13	SCIENTIFIC DATA	6	26
	*11	ENGINEERING DATA	1	27
	*16-17	ENGINEERING DATA(SPIN RATE)	2	29
	*28	ENGINEERING DATA	1	
	*40-45	ENGINEERING DATA	6	
	*64-69	ENGINEERING DATA	6	
	*88-89	ENGINEERING DATA	2	
	FILL	FILL ONES	8	
			52	

* ENGINEERING DATA WORDS

② ENG FRM 0 - 11,16,17

⑤ ENG FRM 1 - 11,28,40,41,42,43,44,45,
64,65,66,67,68,69,88,89

ENG FRM 2 - 11,40,41

② ENG FRM 3 - 11,28

EDR FRAME = 52 BYTES (8 BITS)
EDR RECORD = 72 FRAMES
= 3744 BYTES

HELIOS A

EXPERIMENTER 7

EDR

FORMAT 5

	DESCRIPTION	BYTES	
EVT	S/C EVENT TIME	4	
GMT	GROUND REC'D TIME	4	8
FN	FRAME NUMBER	2	10
TI	SPACECRAFT CLOCK	2	12
SI	STATUS INDICATORS	4	16
LT	ONE WAY LIGHT TIME	4	20
33-35	SCIENTIFIC DATA	3	
*11	ENGINEERING DATA	1	
*16-17	ENGINEERING DATA(SPIN RATE)	2	
*28	ENGINEERING DATA	1	
*40-45	ENGINEERING DATA	6	
*64-69	ENGINEERING DATA	6	
*88-89	ENGINEERING DATA	2	
FILL	FILL ONES	11	
		52	

* ENGINEERING DATA WORDS
SAME AS FORMAT 1

MAR 9 1973

HELIOS A
EDR
COMMAND INFORMATION

- THE COMMAND PORTION OF THE TLM/CMD TAPE WILL BE THE LAST FILE ON THE TAPE
- THE GENERAL FORMAT OF THE COMMAND FILE WILL BE A HEADER RECORD FOLLOWED BY RECORDS OF COMMAND DATA
- THE HEADER RECORD WILL BE THE SAME AS TELEMETRY RECORD HEADER. ITEMS (IN THE HEADER RECORD) THAT DO NOT APPLY TO COMMAND DATA WILL BE BLANK
- A COMMAND RECORD WILL CONTAIN A NUMBER OF COMMANDS PLUS ASSOCIATED INFORMATION (SEE COMMAND FORMAT)
- GMT REPRESENTS BIT 1 SEND TIME
- COMMAND IS AN OCTAL VALUE 0 - 377
- STA IS THE STATION SENDING THE COMMAND
- DIS IS THE CONFIRMED OR ABORT INDICATOR
    - CONFIRMED = 3
    - ABORTED = 4
- COMMANDS WILL APPEAR IN THE COMMAND RECORD IN TIME SEQUENCE
- INCOMPLETE RECORDS WILL BE FILLED WITH ALL ONES

MAR 9 1973

HELIOS A
EDR
COMMAND FORMAT

		WORDS*
GMT	GMT IN TENTHS OF SECONDS	1
LT	UPLINK LIGHT TIME	1
CMD	SPACECRAFT COMMAND	1
STA	COMMANDING STATION	1/2
DIS	CONFIRMED(3)/ABORTED(4)	1/2
		4

* WORD = 36 BITS

FRAME = ONE COMMAND AND ASSOCIATED INFORMATION
= 4 WORDS(36 BITS)

RECORD = 10 FRAMES
= 40 WORDS(36 BITS)

MAY 30 1974

HELIOS-A
EDR
ORBIT/ATTITUDE
TAPE FORMAT

- The general format of the orbit/attitude (ORB/ATT) EDR is a label record followed by records of ORB/ATT data.

- The label record (attached) will consist of 72 characters, written in IBM BCD tape format, odd parity.

- The ORB/ATT parameters for HELIOS are shown as items 1-162 on the attached sheets.

- These parameters will appear on the ORB/ATT EDR in the same order as they are on the attachments.

- Each item in the data record is a UNIVAC 1108 double precision word (72 bits).

- The ORB/ATT EDR will be written on seven (7) track, 800 BPI magnetic tape.

- An ORB/ATT data record = 162 double precision words.

- Each record contains data for one point. The distance between two time points is:

  - 6 minutes for a distance of Earth-Helios less than one million kilometers and,

  - 60 minutes for distance more than one million kilometers.

DEC 12 1973

HELIOS-A

EDR

ORB/ATT LABEL

FORMAT

This label will preceed all files on the ORB/ATT EDR. The label will consist of 78 characters.

Labels will be written in IBM BCD tape format, odd parity.

1 - 7 + Space	International Code
9 - 11	Tape Type (ORB)
12 - 23	Spaces
24 - 25 + Space	Year of Recording (last 2 digits)
27 - 29 + Space	File Start Time (DAY)
31 - 36 + Space	File Start Time (HHMMSS)
38 - 40 + Space	File Stop Time (DAY)
42 - 47 + Space	File Stop Time (HHMMSS)
49 - 52 + Space	O/A Master Data Tape Number
54 - 55 + Space	O/A Master Data Tape File Number
57 - 62 + Space	Date O/A EDR generated
64 - 66 + Space	O/A EDR Run Number
68 - 69 + Space	O/A EDR File Number
71 - 72 + Space	O/A EDR Reel Number
74 - 76	Experimenter ID
77 - 78	Spares

HELIOS A
ORB/ATT EDR
DATA RECORD
FORMAT

MAY 30 1974

Time Block

1. Julian date, ephemeris time
2. Time in seconds past January 1, 1950, ephemeris time
3. Year
4. Month
5. Day
6. Hour
7. Minutes

of Gregorian calendar date

8. Seconds
9. Time from launch in seconds
10. ET - UTC, in seconds
11. ΔT (Time difference between Orbit and Attitude calculations)
12. Status switch
    - 0 = both Orbit & Attitude data present
    - 1 = Orbit data only
    - 2 = Attitude data only
13. Spare

Heliocentric Block

14. x
15. y
16 z

Position coordinates of Helios in A. U.

17. U_x
18. U_y
19. U_z

Velocity coordinates of Helios in A. U./DAY

20. - 25. Same as above for Mercury

26. - 31. Same as above for Venus

32. - 37. Same as above for Earth

38. - 43. Same as above for Mars

Mean ecliptic and equinox of 1950 July 1, 0 hours.

MAY 30 1974

Heliocentric Block cont'd

44. - 49. Same as above for Jupiter
50. - 55. Same as above for Moon

Mean ecliptic equinox of 1950, July 1, 0 hrs.

56. Ecliptical longitude, counted from Mean Equinox
57. Ecliptical longitude, counted from Earth-Sun line
58. Ecliptical latitude of
59. Distance in A. U. of Sun -

Helios

60. - 63. Same as above for Mercury
64. - 67. Same as above for Venus
68. - 71. Same as above for Earth
72. - 75. Same as above for Mars
76. - 79. Same as above for Jupiter
80. - 83. Same as above for Moon
84. Radial velocity
85. Normal velocity

of Helios in A. U./ DAY.

86. Heliographic Longitude of Helios, counted from the Ascending Node
87. Heliographic latitude of Helios

Number of rotations of the Sun,

88. referred to the Earth
89. referred to Helios

at 16° heliographic latitude since launch

Geocentric Block

90. Right Ascension of
91. Declination of
92. Distance in A. U. of Earth

Helios

93. - 95. Same as above for the Moon
96. - 98. Same as above for the Sun

True Earth Equator and Equinox of date

MAY 30 1974

99. Radial velocity of
100. Normal velocity of

Helios in A. U./ DAY

101. x
102. y
103. z

Position of

104. U_x
105. U_y
106. U_z

Velocity of

Helios

107.- 112.. Same for the Sun
113. Solar ecliptical latitude of Helios
114. Solar ecliptical longitude of Helios

Mean ecliptic and equinox of 1950 July 1, 0.0 hours.

115. x
116. y
117. z

Solar Magnetospheric Coordinates of Helios

Distances Block

118. Helios - Mercury
119. Helios - Venus
120. Helios - Earth
121. Helios - Mars
122. Helios - Jupiter
123. Helios - Moon
124. Helios - Moon Orbit

in A. U.

Angles Block

125. Earth - Helios - Sun
126. Helios - Sun - Earth

in degree

MAY 30 1974

Angles Block (cont'd)

127.	Sun - Earth - HELIOS	In Degrees
128.	HELIOS - Earth - Moon	
129.	Ecliptic Plane - (Earth - Helios) Line	
130.	Right Ascension of Orbit Pole	
131.	Declination of Orbit Pole	

Attitude Block

132. Flag for Blackout

133. Solar Aspect Angle

134. 3-Sigma Value of the Solar Aspect Angle

135. Pitch Angle

136. 3-Sigma Value of the Pitch Angle

137. Angle Between Z-Axis and Orbit-Plane

138. Mercury Aspect Angle (Angle between Z-Axis and HELIOS - Mercury Line)

139. Venus Aspect Angle

140. Mean Spin Rate

141. Ecliptical Longitude of S/C - Spin Axis

142. Ecliptical Longitude of S/C - Spin Axis Counted from Earth - Sun Line

143. Ecliptical Latitude of S/C - Spin Axis

HELIOS

Helios

2.0 Experiment Data Frame

The length of an EDR for Rate Data is 128 rate blocks. The cycle can begin with any rate block readout containing line 1 (ID=1 and A B C and D=0) and ending on line 15 (ID=1 and A, B, C and D=1). During the 128 rate blocks, the unsectored and sectored rate sequence ID bits (DS 2, DS 3, and DS 4) will cycle through all 8 possible positions.

*

Interspersed between rate blocks are the PHA blocks, identified by a "zero" in bit 48 of each block (ID=0). Although each PHA block contains all the information pertinent to each individual PHA event, a statistical compilation of these events is necessary. Therefore, all PHA blocks contained within the time interval defined by the rate data cycle above should be processed to yield histograms for each PHA quantity.

2.1 Description of Experiment Data Blocks

2.1.1 Rate Data Blocks

The organization of Rate Data Blocks is shown in 2.1.a, and is distinguished from PHA blocks by bit #48 always = 1. Each counter is designated in Fig. 2.1.a by the entries S-XR(1), R1, R2, or SR1-(1), SR-2(1), etc., and are readout in the sequence shown. Each entry specifies a particular counter as follows:

S-XR: These are the sectored x-ray counters. The number in parenthesis indicates the sector number relative to the x-ray axis off-set value. Each x-ray sector is either $\frac{1}{2048}$ or $\frac{1}{1024}$ of a revolution, depending on the SWB

SWB=1 SWB=0

bit, (DS-7, line 5 only).

R1, R2, etc. These specify unsectored rate counters. There are 20 such counters, and each is commutated, or sequenced, between several different rates as shown in Figure 2.1.b. The commutator position for each readout may be designated by the letters a, b, c ... h corresponding to the value of the Unsectored Rate Sequence ID (bits DS 2, 3, and 4 of lines 2, 3, 4, 6, 7, and 8). These bits are shown in Fig. 2.1.b. as A/B, SEQ. 1 and SEQ. 2 respecitvely. For example, R2 which is readout in Rate Word 4 of line 5, is shared between two different rates from the HET or E7a. When the A/B bit, as readout in DS-2 line 2, 3, 4 is zero, Rate Word 4 line 5 contains R2A, which is the number of times the coincidence condition $A_1\overline{A_2}$BCIII was detected. The next following readout of line 5 will specify A/B=1, and Rate Word 4 will contain R2b, or the number of times A_1BK_2CIII was detected.

As can be seen from Fig. 2.1.b, there are 56 unsectored rates including R20, the unsectored x-ray rate (USXR). This number may be verified by noting that R1 is used for only one rate, R2-R9 and R11-R13 are each used for 2 rates, R15, 16, 18, and 19 are each used for 4 rates, and R10, R14, and R17 are each used for 8 rates.

Special attention must be given the unsectored rates R1, R9, R14, and R17 since these are not readout in a single line. Each requires 3 consecutive rate blocks to complete its readout since each rate block contains only 4 of the 12 bits necessary. For example, rate block bits 37-40 in lines 2, 3, and 4 contain the 12 bits of R9 and bit 43 (DS-2) identifies whether it is R9a (DS 2=0) or R9b (DS2=1). R14 and R17, which are readout in lines 10-12 and 14-16 respectively, are each shared between eight different

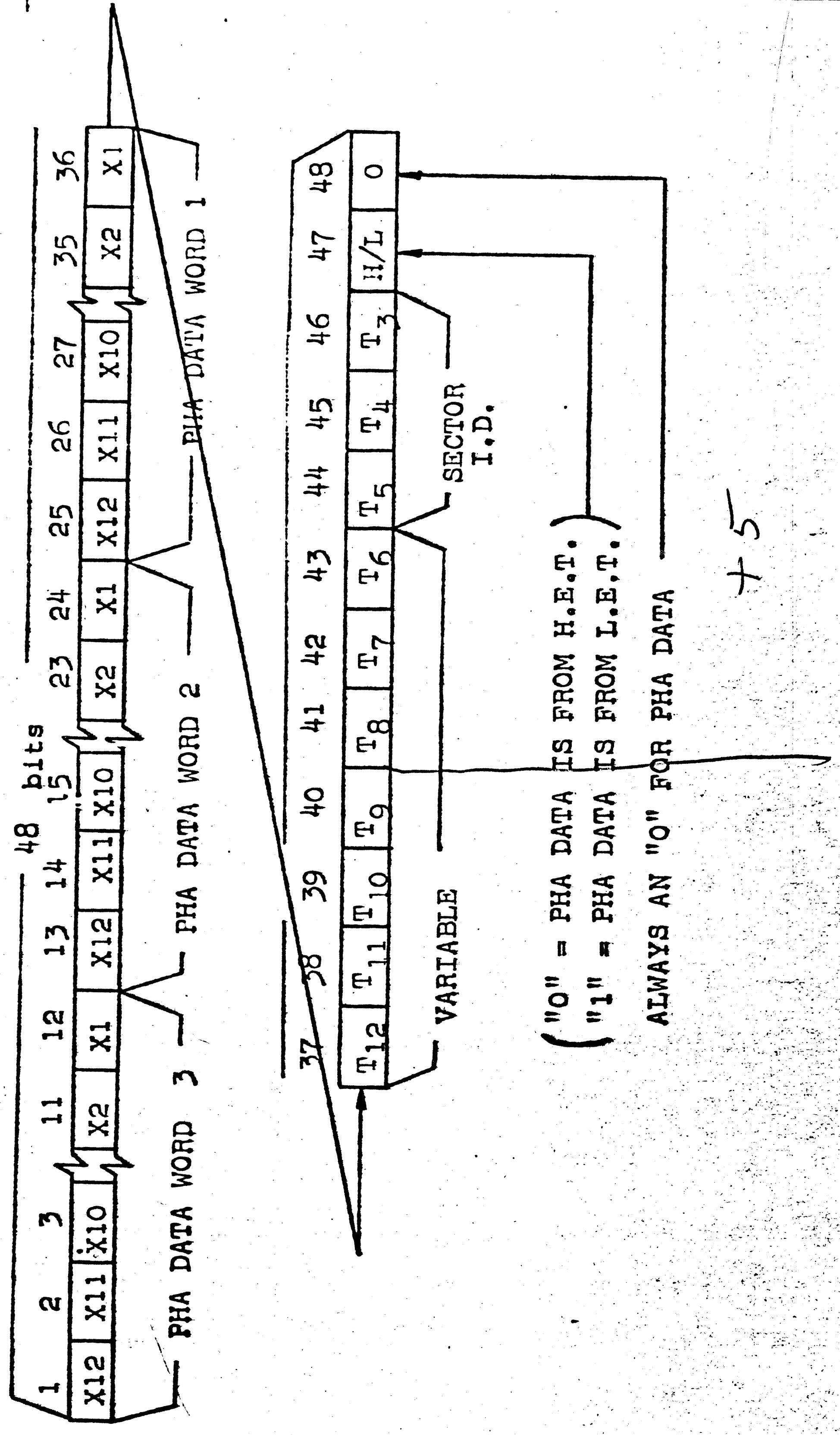

("0" = PHA DATA IS FROM H.E.T.
"1" = PHA DATA IS FROM L.E.T.)

ALWAYS AN "O" FOR PHA DATA

Fig. 2.1.c

TABLE 2.1.b

RATE INPUT	RATE	COMMUTATION BITS TO SELECT						DET
		A/B	SEQ.1	SEQ.2	SSEQ.1	SSEQ.2	SSEQ.3	
R1	$(A_2K_1+A_1CI)B\overline{CIII}$							HET
R2	$A_1\overline{A_2}BC\overline{III}$	0						
	$A_1BK_2\overline{CIII}$	1						
R3	$A_2BC\overline{III}$	0						
	$A_2BK_2\overline{CI}$	1						
R4	$A_2BK_2CI\overline{CII}$	0						
	A_1 ☆	1						
R5	$A_2BK_2CICII\overline{CIII}$	0						
	A_2 —	1						
R6	$A_1\overline{A_2}B\overline{CI}$	0						
	$A_1\overline{A_2}BCI\overline{CII}$	1						
R7	$A_1\overline{A_2}BCICII\overline{CIII}$	0						
	$A_2BK_1\overline{CI}$	1						
R8	$A_2BK_1CI\overline{CII}$	0						
	$A_2BK_1CICII\overline{CIII}$	1						
R9	~~$\overline{SI}$ $\overline{SII}$ $\overline{SII_a}$ $\overline{SIII}$ VLET-1~~	0						
	~~$\overline{SI}$ $\overline{SII}$ $\overline{SII_a}$ $\overline{SIII}$ VLET-2~~	1						
R10	DI_1	0	0	0				LET
	⋮	LSB		MSB				
	DI_8	1	1	1				
R11	$DIDII\overline{F}$	0						
	$DIDII\mathcal{E}D\overline{F}$	1						
R12	$DIDIIE_1\overline{F}$	0						
	$DIDII\mathcal{E}DE_3\overline{F}$	1						
R13	$DIDIIE_2\overline{F}$	0						
	$DIDII\mathcal{E}DE_4\overline{F}$	1						
R14	DI —	0	0					
	DII —	1	0					
	E_1 —	0	1					
	F	1	1					
	B —	0	0	1				HET
	CI —	1	0	1				
	CII —	0	1	1				
	CIII —	1	1	1				
R15	$SI_1\overline{SII}\,SII_a\,\overline{SIII}$	0	0					VLET 1
	$SI_2\overline{SII}\,\overline{SII_a}\,\overline{SIII}$	1	0					
	$SI_3\overline{SII}\,SII_a\,\overline{SIII}$	0	1					
	$SI_4\overline{SII}\,\overline{SII_a}\,\overline{SIII}$	1	1					
R16	$SI\,SII_1\,\overline{SII_a}\,\overline{SIII}$	0	0					
	$SI\,SII_2\,\overline{SII_a}\,\overline{SIII}$	1	0					
	$SI\,SII_3\,\overline{SII_a}\,\overline{SIII}$	0	1					
	$SI\,SII_4\,\overline{SII_a}\,\overline{SIII}$	1	1					
R17	SI VLET-1	0	0	0				
	SII VLET-1	1	0	0				
	SII_a VLET-1	0	1	0				
	SIII VLET-1	1	1	0				
	SI VLET-2	0	0	1				VLET 2
	SII VLET-2	1	0	1				
	SII_a VLET-2	0	1	1				
	SIII VLET-2	1	1	1				
R18	$SI_1\overline{SII}\,\overline{SII_a}\,\overline{SIII}$	0	0					
	$SI_2\overline{SII}\,\overline{SII_a}\,\overline{SIII}$	1	0					
	$SI_3\overline{SII}\,\overline{SII_a}\,\overline{SIII}$	0	1					
	$SI_4\overline{SII}\,SII_a\,\overline{SIII}$	1	1					
R19	$SI\,SII_1\,\overline{SII_a}\,\overline{SIII}$	0	0					
	$SI\,SII_2\,\overline{SII_a}\,\overline{SIII}$	1	0					
	$SI\,SII_3\,\overline{SII_a}\,\overline{SIII}$	0	1					
	$SI\,SII_4\,\overline{SII_a}\,\overline{SIII}$	1	1					
R10	USXR ↕							X-RAY
SR1	$A_1\overline{A_2}BCI\overline{CIII}$				0	0	0	HET
	$A_2BK_1\overline{CIII}$				1	0	0	
	$DIDII\overline{F}$				0	1	0	LET
	$DIDIIE_1\overline{F}$				1	1	0	
SR2	$SI_5\overline{SII}\,\overline{SII_a}\,\overline{SIII}$				0	0	0	VLET 1
	$SI_6\overline{SII}\,\overline{SII_a}\,\overline{SIII}$				1	0	0	
	$SI_7\overline{SII}\,\overline{SII_a}\,\overline{SIII}$				0	1	0	
	$SI_8\overline{SII}\,\overline{SII_a}\,\overline{SIII}$				1	1	0	
	$\overline{SI}\,SII_5\,\overline{SII_a}\,\overline{SIII}$				0	0	1	
	$\overline{SI}\,SII_6\,\overline{SII_a}\,\overline{SIII}$				1	0	1	
	$\overline{SI}\,SII_7\,\overline{SII_a}\,\overline{SIII}$				0	1	1	
	$\overline{SI}\,SII_8\,\overline{SII_a}\,\overline{SIII}$				1	1	1	
SR3	$SI_5\overline{SII}\,\overline{SII_a}\,\overline{SIII}$				0	0	0	VLET 2
	$SI_6\overline{SII}\,\overline{SII_a}\,\overline{SIII}$				1	0	0	
	$SI_7\overline{SII}\,\overline{SII_a}\,\overline{SIII}$				0	1	0	
	$SI_8\overline{SII}\,\overline{SII_a}\,\overline{SIII}$				1	1	0	
	$\overline{SI}\,SII_5\,\overline{SII_a}\,\overline{SIII}$				0	0	1	
	$\overline{SI}\,SII_6\,\overline{SII_a}\,\overline{SIII}$				1	0	1	
	$\overline{SI}\,SII_7\,\overline{SII_a}\,\overline{SIII}$				0	1	1	
	$\overline{SI}\,SII_8\,\overline{SII_a}\,\overline{SIII}$				1	1	1	

rates. The unsectored Rate Sequence ID bits in the preceeding line 2 (or 3, 4, 6, 7, or 8) must be used to identify the commutator position. Do not use the sectored rate sequence bits in the same lines as the R10 and R17 data since these bits do not specify the unsectored rate commutator position.

SR1-(1) etc. These specify sectored rate counters and the number in parenthesis specifies the 45° increment during which counting is allowed in each counter relative to the roll index pulse SP0. Each set of SR counters is commutated among several rates as shown in Fig. 2.1.b, and the commutator position is identified by the Sectored Rate Sequence ID bits in DS2, 3, and 4 of lines 8-16. For example, Rate Word 4 - line 9 contains the number of times a given coincidence condition was detected during the first 45° of revolution following the SP0 pulse. The coincidence condition is determined by Sectroed Rate Sequence ID bits; if these bits are DS4=0, DS3=DS2=1, the commutation position is 3 and the rate is SRlc. Figure 2.1.b shows that this rate is DI DII E_1 $\overline{F}$.

2.1.2 PHA Data Blocks

The PHA data blocks are shown in Figure 2.1.c. Each 12 bit PHA data word represents the digitized amplitude of the pulse from a given detector during a specific instant in time. Incoming charged particles which traverse several detectors in a given telescope may produce a coincident condition which initiates the pulse amplitude analysis. Several additional tag-bits further identify the particle by specifying the look orientation of the telescope at the time of arrival, which of several coincidence conditions initiated the analysis, how far into the stack of detectors the particle penetrated and other non-related housekeeping bits.

The tag bit assignments for HET and LET PHA data blocks is as follows:

DATA CONTENTS

Tag Bit	HET (Bit 47=0)	LET (Bit 47=1)
T3	Sector ID (2^2)	Sector ID $(2^{\cancel{1}2})$
T4	Sector ID (2^1)	Sector ID (2^1)
T5	Sector ID (2^0)	Sector ID (2^0)
T6	Event Type Code $(2^{\cancel{1}})$ 0	Event Type Code
T7	Event Type Code $(2^{\cancel{0}})$ 1	PRIORITY RANK
T8	CII Range	
T9	Priority Rank Bit S1	
T10	Priority Rank Bit S2	
T11		
T12		

Each PHA data word specifies the amplitude of the pulse in a specific detector as indicated below:

PHA Data Word	HET (E7a)	LET (E7c)
Word 1	A when H Tag ~~T6~~ T7 = ~~1~~ ~~0~~ 1 CIII " " " = ~~0~~ ~~1~~ 0	 DI
Word 2	B	DII
Word 3	CI+CII	E

The event type code (2 bits for HET, 1 bit for LET) specifies which of several coincidence conditions initiated the analysis. HET Tag T-6 is essentially an inverted CIII penetration indicator; when HT-6=0, the particle penetrated through the stack to CIII and the associated HET PHA Word 1 contains the amplitude of CIII. If HT-6=1, the particle did not penetrate to CIII (whose output is therefore zero) and PHA Word 1 contains the amplitude of detector A. LET-Tag T-6 is also a penetration indicator, but includes amplitude requirements as well. If LET-Tag T-6=1, the summation DI+DII+1.6E exceeded 0.400 volts. This quantity is designated ΣD and hence the corresponding event coincidence condition is $DIDII\Sigma D\overline{F}$.

The priority rank bits S1 and S2 are simply a repeat of the two MSB's of the unsectored rate sequence ID, which are also used in establishing a variable ranked priority system. For each of the four possible combinations of S1 and S2, the coincidence event type which can initiate pulse height analysis are re-ordered so that each event types (for HET) occupies the highest priority position one-fourth of the time.

2.3 Computations Required

2.3.1 Rate Data

The minimum cycle which will readout each rate at least once is 128 rate blocks. During that time, R1 is readout 8 times; R2a and R2b, R3a and R3b, etc. through R13a and R13b are each readout twice; R15a, R15b, R15c, and R15d, etc. through R19 are each readout four times and each eight way commutated rate (R10a, R10b, etc.) is readout once only. Each rate data word must first be converted from its log to linear form ~~and then be added to any previous readouts of the same rate, making sure that each commutated rate position is summed separately (i.e., do not add R9a and R9b together)~~. The accumulation interval may be variable from one test to another, but must always contain an integral number of complete rate sequences (128 rate blocks per sequence). At the end of the accumulation interval, each of the sums should be listed on the printer with the corresponding count rate average. The accumulation time for R1 is essentially the entire accumulation period. The accumulation period for each of the two way commutated rates such as R2a, R2b, R3a, etc. is one-half that for R1, and so on. The period for eight-way commutated rates such as R10a or R14b is one-eighth that for R1.

At the end of each 128 rate block accumulation interval, the largest number will be in R1 since it is not commutated. With internal stimulus turned on and when operating at 4096 bps, format 5, that number should be 1,770,000 or seven decimal digits. If the accumulation interval is longer than 128 blocks, the sum will be correspondingly greater. Hence, summation to $\sim 10^7$, or 2^{24} (16,777,216) may well be required. The count rate averages, however, are not expected to exceed 20,000 per second, hence five decimal digits or 2^{16} is considered adequate.

2.3.2 PHA Data

During the accumulation interval, a histogram should be formed for each of the seven pulse height quantities (A, B, CI + CII, DI, DII and E). Since each pulse amplitude word can be as big as 2^{12}=4096, a complete set of histograms should be 7x4096=28,672 core locations wide. This is impossibly large, and for most engineering purposes 7 histograms of 50 channels each are adequate. Hence, for IST's the histogram routine should count the number of times each pulse amplitude word contains a channel numbered from 0 through 50. The routine should also contain one additional channel for each of the seven quantities to count the "overflow" channels, i.e, channel 51 and higher.

Before data is entered into the histogram, a one channel offset should be added. The PHA channel counters in the experiment are reset to all "1"'s, hence a non-event will readout as 4095, a channel one event will add one count to the 4095 causing counter overflow to all zero's, a channel two event will be readout as a 1, etc. Hence, the amplitude readout in each PHA word should be increased by 1 before entering into the histogram.

In addition to the seven histograms, a number of tally registers are required to book-keep the tag bit information. For both HET and LET, one register for each of the eight sectors should be maintained so that a total of the number of HET events in each sector and the number of LET events in each sector may be determined. Also, a total of the number of events of each type (4 for HET, 2 for LET) should be maintained.

Since a maximum of 320 PHA events in HET and LET will occur during each basic cycle of 128 rate blocks, the capacity of each core location for histograms and associated tag bit registers need only be, at most, several thousand counts. If twelve bit counters were assigned to PHA data array storage, each location would have a capacity of 2^{12}=4095 and four decimal digit readout in a printer would suffice. The number of core locations needed is minimumly:

a)	7 parameters, 50 channels ea	350
b)	7 overflow channels	7
c)	sector counters	16
d)	event code counters	6
		379

Upon completion of the accumulation interval, a listing of each of the 7 histograms and the 29 additional registers is required.

3.0 <u>Evaluation of Test Data</u>

A complete verification of the experiment requires the following procedures:

1. Turn on experiment and configure the command status such that CAL A and CAL B are on, S.S. is on, X-Ray H.V. is off, Force B/O is off, and XRSDM is off. This corresponds to the digital subcom word contents of 374

octal.

2. Perform a real time block-by-block printout for at least 96 consecutive blocks. Verify that each rate block is followed by the correct number of PHA blocks alternating between HET and LET and the successive rate blocks increase in line number from 0 through 15. The correct number of PHA blocks occurring between rate blocks is 5 at bit rates of 4096 or 2048, 3 at 1024 or 512 FMT 2, and 1 at 512 FMT 1 and all lower bit rates.

3. Perform a data accumulation for a minimum of 128 rate blocks. Print the results and verify that the correct rates are stimulated by the internal calibrators (CAL A and/or CAL B). Also verify that the PHA readouts are in the correct channels and that approximately equal number of events appear in each of the eight PHA sectors.

4. Send one CAL command to turn both CAL A and CAL B off. Verify status (subcom word=314). With all internal stimulus off, the only count rates present are due to background radiation, noise, or interference. Accumulate rate data for at least 10 minutes; the exact period must be an integral number of 128 rate blocks and is, therefore, a function of bit rate and mode. At the end of the accumulation period, print the accumulated rate totals and averages.

5. Send one CAL command to turn on CAL A and repeat step 3.

6. Send one CAL command to turn on CAL B and repeat step 3.

7. Verify x-ray command functions and operation of x-ray off-set circuitry:

a. Load the x-ray command register with the minimum off-set (all "1"'s). This is accomplished by sending 8 pairs of X-Ray Data command followed by X-Ray Clock commands. Verify the command register status by observing all "1"'s in bits DS2 thru DS8 in rate line 1 only. Then execute the new x-ray status by sending at least two consecutive CAL commands, but make sure CAL A is left on. The X-Ray XEQ. Register readout (bits DS2 through DS8 in rate line 5) should now read all "1"'s, and S-XR(1) will show the minimum off-set, or 89 counts. Note also the value of the remaining S-XR(i) counters. This number will be a function of bit rate and S/C roll rate.

b. Load the X-Ray Command Register with the maximum off-set by sending six consecutive X-Ray Clock commands followed by X-Ray Data and two additional X-Ray Clock commands. Verify the X-Ray Command Register status by noting all "0"'s in DS2 through DS7 and a "1" in DS8 (XRSDM bit) of rate line 1. Then execute the x-ray status by sending at least two CAL commands but make sure that CAL A is left on. The X-Ray SEQ. Register readout (bits DS2 through DS8 of rate line 5) should now read the same as the command register. Verify that S-XR (1) shows the maximum off-set or 119 counts and that value of the remaining S-XR(i) counters is approximately double the reading found in paragraph a above.

8. Verify the Sector Sync. on/off functions as follows:

a. at 4096 bps with the sector sync. on, those sectored rates (SR's) that are stimulated by the internal CAL are allowed to accumulate for 52 rolls. Assuming the simulated S/C roll rate is exactly 60 RPM, each counter will be on for 1/8 (52) seconds. Since the CAL pulser rate is the bit rate, the number of counts in each SR readout should be approximately 26,624 counts. Note that CAL A and CAL B must be on during this test, and that line by line printout or single-cycle (128 rate blocks) accumulation interval is required to verify this number.

b. At bit rates of 1024, 512, or 256, the SR accumulation interval is 69 rolls. The correct number of counts which should appear in a single SR readout can be computed as:

$$N=\frac{1}{8}\text{ (69) Sec. x (bit rate) }\frac{\text{cts}}{\text{sec}}$$

and should be verified in at least one of the bit rates noted above.

c. The remaining stages of the roll counter can be verified only at 8 bps when the accumulation internal is 2208 rolls. The number of counts in a SR readout should be approximately 2208 counts. The instrument must be allowed to operate at the 8 bps made for at least two readout sequences (~40 minutes) before beginning the data accumulation interval in the computer.

9. Verify the Force Blackout command by turning Force B/O on (as indicated by the digital subcom word) and verify that no PHA blocks appear in the readout.

10. Verify the X-Ray H.V. on/off command by noting that the corresponding bit in the subcom word responds.

3.2 Test Cycle

The procedural steps outlined above provide a moderately thorough check of the instrument. These steps can be accomplished in any order and may be rearranged to merge with other S/C functions as desired. It is important during the conduct of the test to note any external conditions that can affect the results, such as the presence of radiation sources (type, strength, and location relative to the experiment), S/C activities that may produce electrical noise such as turning TWT's off or on, or radiated RF, S/C simulated roll rate if different from 60 RPM, or similar conditions.

3.3 Mode Table

The experiment cycle times and other parameters of interest as related to S/C bit rate and format is shown in Table 3.3. Since the internal calibrators (CAL A and CAL B) are pulsed at the bit rate, the expected number of counts per sectored rate readout can be variable by 8 times number of rolls in the accumulation interval.

4.0 Engineering Data

4.1 Analog Data

Each analog channel, the parameter measured, and its expected analog value is listed in Table 4.1

4.2 Digital Data

Each command status is readout in the subcom word as shown below. Bit number one is the first bit readout after WTC-4 and is thus considered the most significant bit

Bit 1	X-Ray Window Clock
Bit 2	X-Ray Window Data
Bit 3	Internal Calibrator A on/off
Bit 4	Internal Calibrator B on/off
Bit 5	X-Ray H.V. on/off
Bit 6	Sector Synchronizer on/off
Bit 7	Force Blackout mode
Bit 8	XRSDM on/off

Bit Rate	Format	DM	PHA Readouts Rate Readout	#48 Bit Blocks Per Cycle	Cycle Time 128 Rate Blocks Sec.	/ Min.	# Rolls for Sectored Rate Counters	Exp[illegible]ed # of Counts in 5R Readout (60 RPM)
4096	5	-	5:1	768	432	7.2	52	26,624
2048	1	-	5:1	768	432	7.2	52	13,312
1024	1	-	3:1	512	576	9.6	69	8,832
512	1	-	1:1	256	576	9.6	69	4,416
512	2	-	3:1	? 512	576	9.6	69	4,416
256	2	-	1:1	256	576	9.6	69	2,208
128	2	-	1:1	256	1152	19.2	138	2,208
64	2/3	-	1:1	256	2304	38.4	276	2,208
32	3	-	1:1	256	4608	76.8	552	2,208
16	3	-	1:1	256	9216	153.6	1104	2,208
8	3	-	1:1	256	18432	307.2	2208	2,208
8	3	B/O	0:1	128	9216	153.6	1104	1,104

frmt 5
br 2048

TABLE 3.3

TABLE 4.1

Analog Channel	Connector Pin	Parameter	Estimated Value
ASE 7-1	26	HET Temp	-
2	10	VLET-2 Temp	-
3	27	Det.Mnt.Plate Temp	-
4	11	X-ray det. Temp	-
5	28	TBSP-1 Temp	-
6	12	TBSP-2 Temp	-
7	29	Electronics Temp	-
8	13	Base Plate Temp (Rear)	-
9	30	+12 V. Monitor	~4.4V
10	14	+6 V. Dig. Monitor	~4.4V
11	31	+6 V. Ana. Monitor	~4.4V
12	15	+7.75 V. Monitor	~4.4V
13	32	+4.7V	~4.6V
14	16	Base Plate Temp (Front)	

Expected values for temperature channels vary with ambient conditions and from unit to unit. No operational constraints based on these values will be imposed during testing.

5.1 Line Printer

It is required that data be displayed on the line printer in at least four different formats as described below.

5.1.1 Line-by-Line Display

Each 48 bit block should be printed in chronological order as they appear in telemetry. The component parts of each block should be separated and identified with appropriated legends on the page, and should be converted from binary to decimal or, for rate words, from log to decimal. If the printer page is wide enough (~130 columns) it would be most convenient if the rate data could be on one side of the page and the PHA data on the other side as shown in the suggested format, figure 5.1.1.

Each block results in one line of printout with only the data within that block entered on the page. Proper sequencing of the experiment readout may be easily determined from this format.

This format contains the following entries:

FR No. - frame number from the S/C frame counter in which block was transmitted.

Line No. - same as in figure 2.1.b, rate data block description

S.S. ID - The sectored rate sequence ID contained in DS 2, 3, and 4 of rate data blocks, lines 9-16

U.S.S. ID - The unsectored rate sequence ID from rate data blocks

Rate Word - The contents of the appropriate rate word should be converted from binary log to decimal fixed point form and displayed. Seven columns are required. Each rate word should also be identified by its appropriate symbol as shown in figure 2.1.a.

F.R. No.	Line No.	S.S. ID	U.S.S. ID	Rate Word 4 ID	....	A/CIII/DI	B/DII	CI/CII/E	H/L	ET	R	S
xxxx	xx		x	R12 xxxxxxx	etc.							
xxxx						xxxx	xxxx	xxxx	x	x	x	x
xxxx	xx	x		SR1A(1) xxxxxxx								

16 columns each for rate words 3, 2, and 1

Figure 5.1.1

A/CIII/DI - The contents of PHA word 1 from either HET or LET blocks, converted from binary to decimal and incremented by one.

B/DII - The contents of PHA word 2, as above.

CI+CII/E - The contents of PHA word 3, as above.

H/L - Indicates if the PHA data in that line is from HET or LET as specified by bit 47 of the PHA block.

ET - Event type designator, can be 0, 1, 2, or 3 for HET (tag bits HT6 HT7) or 0,1 for LET (tag bit LT6)

R - The range bit, 0 or 1, located in HT8, applies only to HET blocks.

S - The decimal equivalent of the S1 and S2 bits in either H or L tages.

- - Five additional columns should be reserved for the remaining tag bits and each should be displayed separately.

5.1.2 Accumulated Rate Data Dump

At the end of each rate data accumulation interval in the computer, the processed data should be listed, identifying each rate total and computed average counts/sec by the notation used in 2.1.b (R1A etc.). Also included should be the frame number in which the accumulation interval started and ended, and the total elapsed time in minutes and number of frames. The number of columns required is approximately 5 for the legend, 8 for the total counts, and 5 for the computed average.

5.1.3 Accumulated PHA Data Dump

At the end of each PHA accumulation interval in the computer, the contents of each of the 51 channels for each of seven spectra should be listed. This will require 7x5=35 columns. Each column should of course, be labled at the beginning. The frame number in which the accumulation period started and ended. and the number of frames and elapsed time should also be shown. At the end of the spectra listings, the contents of the book-keeping channels should be listed with appropriate labels.

5.1.4 Engineering Data

Analog Engineering data may be listed by identifying each quantity and then showing the value either in octal or decimal. The digital word should be listed so that the status of each command may be readily determined either bit by bit or in octal. Converting this word to decimal is not desirable.

5.2 Cathode Ray Tube (CRT)

The CRT formats should essentially follows the requirements of 5.1.1 through 5.1.4 above, but the line by line display must be abbreviated significantly. It is suggested that the legends be eliminated, but that the data always be listed beginning with rate line 1 so that the user can, by familiarity, find a specific data word if desired. Frame number could also be detected, but SS ID and US ID must remain.

5.3 Stripchart Recorder (STC)

No requirement.

Helios

Helios

Stillwell

Page 4.

1 block = 16 lines = 8 minor frames
= 1024 minor frames

2.0 Experiment Data Frame

The length of an EDR for Rate Data is 128 rate blocks. The cycle can begin with any rate block readout containing line 1 (ID=1 and A B C and D=0) and ending on line 15 (ID=1 and A, B, C and D=1). During the 128 rate blocks, the unsectored and sectored rate sequence ID bits (DS 2, DS 3, and DS 4) will cycle through all 8 possible positions. *

Interspersed between rate blocks are the PHA blocks, identified by a "zero" in bit 48 of each block (ID=0). Although each PHA block contains all the information pertinent to each individual PHA event, a statistical compilation of these events is necessary. Therefore, all PHA blocks contained within the time interval defined by the rate data cycle above should be processed to yield histograms for each PHA quantity.

2.1 Description of Experiment Data Blocks

2.1.1 Rate Data Blocks

The organization of Rate Data Blocks is shown in 2.1.a, and is distinguished from PHA blocks by bit #48 always = 1. Each counter is designated in Fig. 2.1.a by the entries S-XR(1), R1, R2, or SR1-(1), SR-2(1), etc., and are readout in the sequence shown. Each entry specifies a particular counter as follows:

S-XR: These are the sectored x-ray counters. The number in parenthesis indicates the sector number relative to the x-ray axis off-set value. Each x-ray sector is either $\frac{1}{2048}$ or $\frac{1}{1024}$ of a revolution, depending on the SWB

SWB=1 SWB=0

bit, (DS-7, line $\overset{(4)}{5}$ only).

R1, R2, etc. These specify unsectored rate counters. There are 20 such counters, and each is commutated, or sequenced, between several different rates as shown in Figure 2.1.b. The commutator position for each readout may be designated by the letters a, b, c ... h corresponding to the value of the Unsectored Rate Sequence ID (bits DS 2, 3, and 4 of lines 2, 3, 4, 6, 7, and 8). These bits are shown in Fig. 2.1.b. as A/B, SEQ. 1 and SEQ. 2 respecitvely. For example, R2 which is readout in Rate Word 4 of line 5, is shared between two different rates from the HET or E7a. When the A/B bit, as readout in DS-2 line 2, 3, 4 is zero, Rate Word 4 line 5 contains R2A, which is the number of times the coincidence condition $A_1\overline{A}_2BCIII$ was detected. The next following readout of line 5 will specify A/B=1, and Rate Word 4 will contain R2b, or the number of times A_1BK_2CIII was detected.

As can be seen from Fig. 2.1.b, there are $\overset{64}{(56)}$ unsectored rates including R20, the unsectored x-ray rate (USXR). This number may be verified by noting that R1 is used for only one rate, R2-R9 and R11-R13 are each used for 2 rates, R15, 16, 18, and 19 are each used for 4 rates, and R10, R14, and R17 are each used for 8 rates.

Special attention must be given the unsectored rates R1, R9, R14, and R17 since these are not readout in a single line. Each requires 3 consecutive rate blocks to complete its readout since each rate block contains only 4 of the 12 bits necessary. For example, rate block bits 37-40 in lines 2, 3, and 4 contain the 12 bits of R9 and bit 43 (DS-2) identifies whether it is R9a (DS 2=0) or R9b (DS2=1). R14 and R17, which are readout in lines 10-12 and 14-16 respectively, are each shared between eight different

RATE INPUT	RATE	COMMUTATION BITS TO SELECT A/B	SEQ.1	SEQ.2	SSEQ.1	SSEQ.2	SSEQ.3	DET
R1	$(A_2K_1+A_1CI)B\overline{CIII}$							HET
R2	$A_1\overline{A_2}\,BCIII$	0						
	$A_1BK_2\overline{CIII}$	1						
R3	A_2BCIII	0						
	$A_2BK_2\overline{CI}$	1						
R4	$A_2BK_2CI\overline{CII}$	0						
	A_1 ☆	1						
R5	$A_2BK_2CICII\overline{CIII}$	0						
	A_2 —	1						
R6	$A_1\overline{A_2}\,B\overline{CI}$	0						
	$A_1\overline{A_2}\,BCI\overline{CII}$	1						
R7	$A_1\overline{A_2}\,BCICII\overline{CIII}$	0						
	$A_2BK_1\overline{CI}$	1						
R8	$A_2BK_1CI\overline{CII}$	0						
	$A_2BK_1CICII\overline{CIII}$	1						
R9	$\overline{SI}\ \overline{SII}\ \overline{SII_a}\ \overline{SIII}$ VLET-1	0						
	$\overline{SI}\ \overline{SII}\ \overline{SII_a}\ \overline{SIII}$ VLET2	1						
R10	DI_1	0	0	0				LET
	⋮	LSB		MSB				
	DI_8	1	1	1				
R11	$DI\,DII\,\overline{F}$	0						
	$DI\,DII\,E\,D\overline{F}$	1						
R12	$DI\,DII\,E_1\overline{F}$	0						
	$DI\,DII\,E\,DE_3\overline{F}$	1						
R13	$DI\,DII\,E_2\overline{F}$	0						
	$DI\,DII\,E\,DE_4\overline{F}$	1						
R14	DI —	0	0					
	DII —	1	0					
	E_1 —	0	1					
	F	1	1					
	B —	0	0	1				HET
	CI —	1	0	1				
	CII —	0	1	1				
	CIII —	1	1	1				
R15	$SI_1\overline{SII}\ \overline{SII_a}\ \overline{SIII}$	0	0					VLET 1.
	$SI_2\overline{SII}\ \overline{SII_a}\ \overline{SIII}$	1	0					
	$SI_3\overline{SII}\ \overline{SII_a}\ \overline{SIII}$	0	1					
	$SI_4\overline{SII}\ \overline{SII_a}\ \overline{SIII}$	1	1					
R16	$SI\,SII_1\overline{SII_a}\ \overline{SIII}$	0	0					
	$SI\,SII_2\overline{SII_a}\ \overline{SIII}$	1	0					
	$SI\,SII_3\overline{SII_a}\ \overline{SIII}$	0	1					
	$SI\,SII_4\overline{SII_a}\ \overline{SIII}$	1	1					
R17	SI VLET-1	0	0	0				
	SII VLET-1	1	0	0				
	SII_a VLET-1	0	1	0				
	SIII VLET-1	1	1	0				
	SI VLET-2	0	0	1				VLET 2
	SII VLET-2	1	0	1				
	SII_a VLET-2	0	1	1				
	SIII VLET-2	1	1	1				
R18	$SI_1\overline{SII}\ \overline{SII_a}\ \overline{SIII}$	0	0					
	$SI_2\overline{SII}\ \overline{SII_a}\ \overline{SIII}$	1	0					
	$SI_3\overline{SII}\ \overline{SII_a}\ \overline{SIII}$	0	1					
	$SI_4\overline{SII}\ \overline{SII_a}\ \overline{SIII}$	1	1					
R19	$SI\,SII_1\overline{SII_a}\ \overline{SIII}$	0	0					
	$SI\,SII_2\overline{SII_a}\ \overline{SIII}$	1	0					
	$SI\,SII_3\overline{SII_a}\ \overline{SIII}$	0	1					
	$SI\,SII_4\overline{SII_a}\ \overline{SIII}$	1	1					
R20	USXR							X-RAY
SR1	$A_1\overline{A_2}\,BCI\overline{CIII}$.				0	0	0	HET
	$A_2BK_1\overline{CIII}$				1	0	0	
	$DI\,DII\,\overline{F}$				0	1	0	LET
	$DI\,DII\,E_1\overline{F}$				1	1	0	
SR2	$SI_5\overline{SII}\ \overline{SII_a}\ \overline{SIII}$				0	0	0	VLET 1
	$SI_6\overline{SII}\ \overline{SII_a}\ \overline{SIII}$				1	0	0	
	$SI_7\overline{SII}\ \overline{SII_a}\ \overline{SIII}$				0	1	0	
	$SI_8\overline{SII}\ \overline{SII_a}\ \overline{SIII}$				1	1	0	
	$\overline{SI}\,SII_5\overline{SII_a}\ \overline{SIII}$				0	0	1	
	$\overline{SI}\,SII_6\overline{SII_a}\ \overline{SIII}$				1	0	1	
	$\overline{SI}\,SII_7\overline{SII_a}\ \overline{SIII}$				0	1	1	
	$\overline{SI}\,SII_8\overline{SII_a}\ \overline{SIII}$				1	1	1	
SR3	$SI_5\overline{SII}\ \overline{SII_a}\ \overline{SIII}$				0	0	0	VLET 2
	$SI_6\overline{SII}\ \overline{SII_a}\ \overline{SIII}$				1	0	0	
	$SI_7\overline{SII}\ \overline{SII_a}\ \overline{SIII}$				0	1	0	
	$SI_8\overline{SII}\ \overline{SII_a}\ \overline{SIII}$				1	1	0	
	$\overline{SI}\,SII_5\overline{SII_a}\ \overline{SIII}$				0	0	1	
	$\overline{SI}\,SII_6\overline{SII_a}\ \overline{SIII}$				1	0	1	
	$\overline{SI}\,SII_7\overline{SII_a}\ \overline{SIII}$				0	1	1	
	$\overline{SI}\,SII_8\overline{SII_a}\ \overline{SIII}$				1	1	1	

DI_1	0 0 0
DI_2	1 0 0
DI_3	0 1 0
DI_4	1 1 0
DI_5	0 0 1
DI_6	1 0 1
DI_7	0 1 1
DI_8	1 1 1

001
101
011
111

TABLE 2.1.b

S-XRY Sectored X-RAY

PHA Tape Logical Record Format

Displacement	Type	Description
0	I*4	Time of day (MS) for first page contained in record
4	I*4	Time of day (MS) for page which is expected to immediately follow the last page in this record
8	I*2	Day (RMJD) for first page contained in record
10	I*2	Day (RMJD) for page which is expected to immediately follow the last page in this record
12	I*4	Round Trip Light Time
16	I*4	Spacecraft Clock
20	I*2	Absolute File Number
22	I*2	Time Correction Flag
24	I*2	Ratio of PHA blocks to RATES blocks
26	I*2	Bit Rate (8, 16, 32, 64, 128, 256, 512, 1024, 2048, 4096)
28	I*2	Format (1, 2, 3, 5)
30	I*2	Frame Counter Correction
32	I*2	Data Type
34	I*2	Data Quality
36		All the subcom data associated with the first page of data contained in the record. Refer to Tables 1 and 2 for a description of the subcom data for the two format groups.
64 (128)	I*4	All the rates data associated with the first page of data contained in PHA record. The rates data associated with each page appear in eight consecutive words, as follows:

Displacement **Type** **Description**

(1) HET RATE R1 - (A2K1 + A1C1)B CIII

(2) HET RATE R1 - (A2K1 + A1C2)B CIII

(3) HET RATE R2A - A1 $\overline{A2}$ B CIII

(4) HET RATE R2B - A1 BK2 $\overline{CIII}$

(5) HET RATE R3A - A2 B CII

(6) LET RATE R11A - DI DII $\overline{\Sigma}$

(7) LET RATE R11B - DI DII Σ D[illegible]

(8) Computed HET RATE R1 = (R6B + R7A + R7B + R8A + R8B)

All rates which fail the trend check will be indicated by a negative rate value. Whenever a rate with a value of zero fails the trend check, it will be set to the value -21000000. Padded rates will be indicated by the value -20000000.

I*2

All the PHA data associated with the [illegible] page of data contained in the [illegible] record. Each PHA entry, comprised of a HET and LET event, has a unique time associated with it and appears in three consecutive words, as follows:

0(MSB)..............................31(LSB)

(1) HET - 1 HET - 2

(2) HET - 3 LET - 1

(3) LET - 2 LET - 3

Padded/missing PHA data is indicated by a negative one in the PHA entry. There is a varying number of PHA readouts per page depending upon the PHA/RATE block ratio: At a ratio of 5:1, there are [illegible] PHA readouts; at 3:1, there are [illegible] PHA readouts; and at 1:1, there are 32 PHA readouts. (See Table 3 for the structure of a PHA readout.)

Displacement	Type	Description
D_2 (D_2^1)		All the subcom, Rates, and PHA data for the second page of data contained in the record
D_3(D_3^1)		All the subcom, Rates, and PHA data for the third page of data contained in the record
D_4(D_4^1)		All the subcom, Rates, and PHA data for the fourth page of data contained in the record

Note: The first displacement is for data transmitted in formats 1, 2, or 3. The SECOND displacement is for data transmitted in format 5. Actual displacements for ~~page~~ pages 2 - 4 are dependent upon bit rate and the PHA/RATES block ratio.

Table 1. PHA Tape

(Subcom data for format group 1 - formats 1, 2, 3)

Displacement	Type	Description
0	I*2	Spin Rate (in RPM)
2	I*2	HET (E7A) temperature
4	I*2	VLET1 (E7B1) temperature
6	I*2	VLET2 (E7B2) temperature
8	I*2	LET (E7C) temperature
10	I*2	detector mounting plate temp.
12	I*2	X-Ray detector temperature
14	I*2	thermal blanket support plate 1 temp.
16	I*2	thermal blanket support plate 2 temp.
18	I*2	electronics temperature
20	I*2	base plate temperature
22	I*2	+12 v monitor
24	I*2	+6 v digital monitor
26	I*2	+6 v analog monitor
28	I*2	+7.75 v monitor
30	I*2	+4.7 v monitor
32	I*2	base plate temperature (front)
34	I*2	Power status (1 on, 0 off)
36	L*1	X-Ray Window Clock
37	L*1	X-Ray Window Data
38	L*1	Internal Calibrator A
39	L*1	Internal Calibrator B
40	L*1	X-Ray high voltage
41	L*1	Sector synchronizer
42	L*1	Force blackout mode
43	L*1	X-Ray sector data mode
44	I*2	X-Ray command reg.
46	I*2	X-Ray XEQ. reg.

(12 words)

Table 2. PHA Tape

(Subcom Data for format group 2 - format 5)

Displacement	Type	Description
0 - 43	same as 0 - 43, Table 1, for sequence 1	
44 - 87	same as 0 - 43, Table 1, for sequence 2	
88 - 91	same as 44 - 47, Table 1	
(23 words)		

Table 3. Helios PHA Events

QEVT

Halfword 1 METTAAAAAAAAAAAA

Halfword 2 BBBBBBBBBBBBCCCC

Halfword 3 ~~CCCCCCCCRSSQPPN~~
CCCCCCCCRSSSQPPN

Where:

M = 0, data is good
= 1, data is missing ~~1~~ padded
E = 0, LET event
= 1, HET event
TT = 00, A1$\overline{A2}$BCIII (HET)/DIDII Σ D $\overline{F}$ (LET) 0
= 01, A2BCIII (HET)/DIDII $\overline{F}$ (LET) 1
= 10, (A2K1 + A1CI) B$\overline{CIII}$ (HET)/(No LET) 2
= 11, A1BK2$\overline{CIII}$ (HET)/(No LET) 3
QEVT
R = 0, CII threshhold not exceeded
= 1, CII threshhold is exceeded
HET only QCZR
SSS = 0-7, sectors 0-7, respectively QSECT
Q = 0, PHA word 1 is the A amplitude
= 1, PHA word 1 is the CIII amplitude
HET only QAC3
PP = 0-3 priorities (HET)/0-1 priorities (LET) QPRI
N = 0, good event
= 1, null event

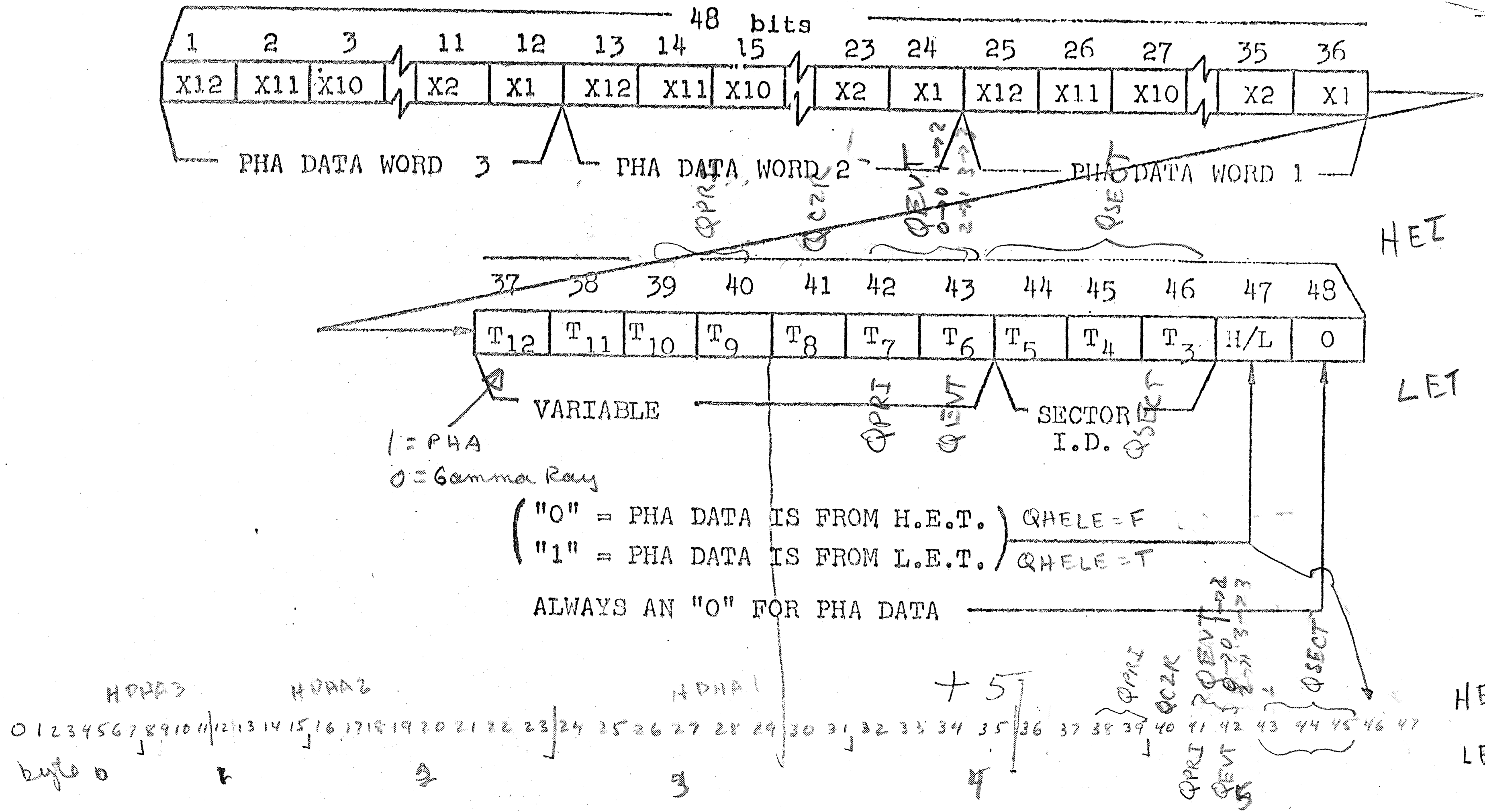

QEVT = 2 → 1 QAC3 = T otherwise QAC3 = F for HET QAC3 = T ⇒ not CIII

Fig. 2.1.c

rates. The unsectored Rate Sequence ID bits in the preceeding line 2 (or 3, 4, 6, 7, or 8) must be used to identify the commutator position. Do not use the sectored rate sequence bits in the same lines as the R10 and R17 data since these bits do not specify the unsectored rate commutator position.

SR1-(1) etc. These specify sectored rate counters and the number in parenthesis specifies the 45° increment during which counting is allowed in each counter relative to the roll index pulse SP0. Each set of SR counters is commutated among several rates as shown in Fig. 2.1.b, and the commutator position is identified by the Sectored Rate Sequence ID bits in DS2, 3, and 4 of lines 8-16. For example, Rate Word ~~4~~ 8 - line 9 contains the number of times a given coincidence condition was detected during the first 45° of revolution following the SP0 pulse. The coincidence condition is determined by Sectroed Rate Sequence ID bits; if these bits are DS4=0, DS3=DS2=1, the commutation position is 3 and the rate is SR1c. Figure 2.1.b shows that this rate is DI DII E_1 $\overline{F}$.

2.1.2 PHA Data Blocks

not in DM7 or any blackout
probably only in high bit rates

The PHA data blocks are shown in Figure 2.1.c. Each 12 bit PHA data word represents the digitized amplitude of the pulse from a given detector during a specific instant in time. Incoming charged particles which traverse several detectors in a given telescope may produce a coincident condition which initiates the pulse amplitude analysis. Several additional tag-bits further identify the particle by specifying the look orientation of the telescope at the time of arrival, which of several coincidence conditions initiated the analysis, how far into the stack of detectors the particle penetrated and other non-related housekeeping bits.

The tag bit assignments for HET and LET PHA data blocks is as follows:

DATA CONTENTS

Tag Bit	HET (Bit 47=0)	LET (Bit 47=1)
T3	Sector ID (2^2)	Sector ID $(2^{\overset{2}{\cancel{1}}})$
T4	Sector ID (2^1)	Sector ID (2^1)
T5	Sector ID (2^0)	Sector ID (2^0)
T6	Note → Event Type Code $(2^{\overset{0}{\cancel{1}}})$ 1	Event Type Code ←
T7	Event Type Code $(2^{\cancel{0}})$	PRIORITY RANK
T8	CII Range	
T9	Priority Rank Bit S1 ←	
T10	Priority Rank Bit S2 ←	
T11		
T12		

Each PHA data word specifies the amplitude of the pulse in a specific detector as indicated below:

PHA Data Word	HET (E7a)	LET (E7c)
Word 1	A when H Tag ~~T6~~ T7 = ~~1~~ CIII " " " = ~~0~~	DI
Word 2	B	DII
Word 3	CI+CII	E

The event type code (2 bits for HET, 1 bit for LET) specifies which of several coincidence conditions initiated the analysis. HET Tag T-7 is essentially an inverted CIII penetration indicator; when HT-7=0, the particle penetrated through the stack to CIII and the associated HET PHA Word 1 contains the amplitude of CIII. If HT-7=1, the particle did not penetrate to CIII (whose output is therefore zero) and PHA Word 1 contains the amplitude of detector A. LET-Tag T-6 is also a penetration indicator, but includes amplitude requirements as well. If LET-Tag T-6=1, the summation DI+DII+1.6E exceeded 0.400 volts. This quantity is designated ΣD and hence the corresponding event coincidence condition is $DIDII\Sigma D\overline{F}$.

The priority rank bits S1 and S2 are simply a repeat of the two MSB's of the unsectored rate sequence ID, which are also used in establishing a variable ranked priority system. For each of the four possible combinations of S1 and S2, the coincidence event type which can initiate pulse height analysis are re-ordered so that each event types (for HET) occupies the highest priority position one-fourth of the time.

2.3 Computations Required

2.3.1 Rate Data

The minimum cycle which will readout each rate at least once is 128 rate blocks. During that time, R1 is readout 8 times; R2a and R2b, R3a and R3b, etc. through R13a and R13b are each readout twice; R15a, R15b, R15c, and R15d, etc. through R19 are each readout four times and each eight way commutated rate (R10a, R10b, etc.) is readout once only. Each rate data word must first be converted from its log to linear form ~~and then be added to any previous readouts of the same rate, making sure that each commutated rate position is summed separately (i.e., do not add R9a and R9b together)~~. The accumulation interval may be variable from one test to another, but must always contain an integral number of complete rate sequences (128 rate blocks per sequence). At the end of the accumulation interval, each of the sums should be listed on the printer with the corresponding count rate average. The accumulation time for R1 is essentially the entire accumulation period. The accumulation period for each of the two way commutated rates such as R2a, R2b, R3a, etc. is one-half that for R1, and so on. The period for eight-way commutated rates such as R10a or R14b is one-eighth that for R1.

At the end of each 128 rate block accumulation interval, the largest number will be in R1 since it is not commutated. With internal stimulus turned on and when operating at 4096 bps, format 5, that number should be 1,770,000 or seven decimal digits. If the accumulation interval is longer than 128 blocks, the sum will be correspondingly greater. Hence, summation to $\sim 10^7$, or 2^{24} (16,777,216) may well be required. The count rate averages, however, are not expected to exceed 20,000 per second, hence five decimal digits or 2^{16} is considered adequate.

2.3.2 PHA Data

During the accumulation interval, a histogram should be formed for each of the seven pulse height quantities (A, B, CI + CII, DI, DII and E). Since each pulse amplitude word can be as big as 2^{12}=4096, a complete set of histograms should be 7x4096=28,672 core locations wide. This is impossibly large, and for most engineering purposes 7 histograms of 50 channels each are adequate. Hence, for IST's ? the histogram routine should count the number of times each pulse amplitude word contains a channel numbered from 0 through 50. The routine should also contain one additional channel for each of the seven quantities to count the "overflow" channels, i.e, channel 51 and higher.

what is IST ?

Before data is entered into the histogram, a one channel offset should be added. The PHA channel counters in the experiment are reset to all "1"'s, hence a non-event will readout as 4095, a channel one event will add one count to the 4095 causing counter overflow to all zero's, a channel two event will be readout as a 1, etc. Hence, the amplitude readout in each PHA word should be increased by 1 before entering into the histogram.

In addition to the seven histograms, a number of tally registers are required to book-keep the tag bit information. For both HET and LET, one register for each of the eight sectors should be maintained so that a total of the number of HET events in each sector and the number of LET events in each sector may be determined. Also, a total of the number of events of each type (4 for HET, 2 for LET) should be maintained.

Since a maximum of 320 PHA events in HET and LET will occur during each basic cycle of 128 rate blocks, the capacity of each core location for histograms and associated tag bit registers need only be, at most, several thousand counts. If twelve bit counters were assigned to PHA data array storage, each location would have a capacity of 2^{12}=4095 and four decimal digit readout in a printer would suffice. The number of core locations needed is minimumly:

a)	7 parameters, 50 channels ea	350
b)	7 overflow channels	7
c)	sector counters	16
d)	event code counters	6
		379

Upon completion of the accumulation interval, a listing of each of the 7 histograms and the 29 additional registers is required.

3.0 Evaluation of Test Data

A complete verification of the experiment requires the following procedures:

1. Turn on experiment and configure the command status such that CAL A and CAL B are on, S.S. is on, X-Ray H.V. is off, Force B/O is off, and XRSDM is off. This corresponds to the digital subcom word contents of 374

total.

2. Perform a real time block-by-block printout for at least 96 consecutive blocks. Verify that each rate block is followed by the correct number of PHA blocks alternating between HET and LET and the successive rate blocks increase in line number from 0 through 15. The correct number of PHA blocks occurring between rate blocks is 5 at bit rates of 4096 or 2048, 3 at 1024 or 512 FMT 2, and 1 at 512 FMT 1 and all lower bit rates.

3. Perform a data accumulation for a minimum of 128 rate blocks. Print the results and verify that the correct rates are stimulated by the internal calibrators (CAL A and/or CAL B). Also verify that the PHA readouts are in the correct channels and that approximately equal number of events appear in each of the eight PHA sectors.

4. Send one CAL command to turn both CAL A and CAL B off. Verify status (subcom word=314). With all internal stimulus off, the only count rates present are due to background radiation, noise, or interference. Accumulate rate data for at least 10 minutes; the exact period must be an integral number of 128 rate blocks and is, therefore, a function of bit rate and mode. At the end of the accumulation period, print the accumulated rate totals and averages.

5. Send one CAL command to turn on CAL A and repeat step 3.

6. Send one CAL command to turn on CAL B and repeat step 3.

7. Verify x-ray command functions and operation of x-ray off-set circuitry:

a. Load the x-ray command register with the minimum off-set (all "1"'s). This is accomplished by sending 8 pairs of X-Ray Data command followed by X-Ray Clock commands. Verify the command register status by observing all "1"'s in bits DS2 thru DS8 in rate line 1 only. Then execute the new x-ray status by sending at least two consecutive CAL commands, but make sure CAL A is left on. The X-Ray XEQ. Register readout (bits DS2 through DS8 in rate line 5) should now read all "1"'s, and S-XR(1) will show the minimum off-set, or 89 counts. Note also the value of the remaining S-XR(i) counters. This number will be a function of bit rate and S/C roll rate.

b. Load the X-Ray Command Register with the maximum off-set by sending six consecutive X-Ray Clock commands followed by X-Ray Data and two additional X-Ray Clock commands. Verify the X-Ray Command Register status by noting all "0"'s in DS2 through DS7 and a "1" in DS8 (XRSDM bit) of rate line 1. Then execute the x-ray status by sending at least two CAL commands but make sure that CAL A is left on. The X-Ray SEQ. Register readout (bits DS2 through DS8 of rate line 5) should now read the same as the command register. Verify that S-XR (1) shows the maximum off-set or 119 counts and that value of the remaining S-XR(i) counters is approximately double the reading found in paragraph a above.

8. Verify the Sector Sync. on/off functions as follows:

a. at 4096 bps with the sector sync. on, those sectored rates (SR's) that are stimulated by the internal CAL are allowed to accumulate for 52 rolls. Assuming the simulated S/C roll rate is exactly 60 RPM, each counter will be on for 1/8 (52) seconds. Since the CAL pulser rate is the bit rate, the number of counts in each SR readout should be approximately 26,624 counts. Note that CAL A and CAL B must be on during this test, and that line by line printout or single-cycle (128 rate blocks) accumulation interval is required to verify this number.

b. At bit rates of 1024, 512, or 256, the SR accumulation interval is 69 rolls. The correct number of counts which should appear in a single SR readout can be computed as:

$$X=\frac{1}{8}\text{ (69) Sec. x (bit rate) }\frac{\text{cts}}{\text{sec}}$$

and should be verified in at least one of the bit rates noted above.

c. The remaining stages of the roll counter can be verified only at 8 bps and the accumulation internal is 2208 rolls. The number of counts in a SR readout should be approximately 2208 counts. The instrument must be allowed to operate at the 8 bps made for at least two readout sequences (~40 minutes) before beginning the data accumulation interval in the computer.

9. Verify the Force Blackout command by turning Force B/O on (as indicated by the digital subcom word) and verify that no PHA blocks appear in the readout.

10. Verify the X-Ray H.V. on/off command by noting that the corresponding bit in the subcom word responds.

3.2 Test Cycle

The procedural steps outlined above provide a moderately thorough check of the instrument. These steps can be accomplished in any order and may be rearranged to merge with other S/C functions as desired. It is important during the conduct of the test to note any external conditions that can affect the results, such as the presence of radiation sources (type, strength, and location relative to the experiment), S/C activities that may produce electrical noise such as turning TWT's off or on, or radiated RF, S/C simulated roll rate if different from 60 RPM, or similar conditions.

3.3 Mode Table

The experiment cycle times and other parameters of interest as related to S/C bit rate and format is shown in Table 3.3. Since the internal calibrators (CAL A and CAL B) are pulsed at the bit rate, the expected number of counts per sectored rate readout can be variable by 8 times number of rolls in the accumulation interval.

4.0 Engineering Data

4.1 Analog Data

Each analog channel, the parameter measured, and its expected analog value is listed in Table 4.1

4.2 Digital Data

Each command status is readout in the subcom word as shown below. Bit number one is the first bit readout after WTC-4 and is thus considered the most significant bit

Bit 1	X-Ray Window Clock
Bit 2	X-Ray Window Data
Bit 3	Internal Calibrator A on/off
Bit 4	Internal Calibrator B on/off
Bit 5	X-Ray H.V. on/off
Bit 6	Sector Synchronizer on/off
Bit 7	Force Blackout mode
Bit 8	XRSDM on/off

BIT Rate	Format	DM	PHA Readouts Rate Readout	#48 BIT Blocks Per Cycle	Cycle Time 128 Rate Blocks Sec.	/ Min.	# Rolls for Sectored Rate Counters	Expected [illegible] Counts in [illegible] Readout (60 RPM)
4096	5	-	5:1	768	432	7.2	52	26,624
2048	1	-	5:1	768	432	7.2	52	13,312
1024	1	-	3:1	512	576	9.6	69	8,832
512	1	-	1:1	256	576	9.6	69	4,416
512	2	-	3:1	? 512	576	9.6	69	4,416
256	2	-	1:1	256	576	9.6	69	2,208
128	2	-	1:1	256	1152	19.2	138	2,208
64	2/3	-	1:1	256	2304	38.4	276	2,208
32	3	-	1:1	256	4608	76.8	552	2,208
16	3	-	1:1	256	9216	153.6	1104	2,208
8	3	-	1:1	256	18432	307.2	2208	2,208
8	3	B/O	0:1	128	9216	153.6	1104	1,104

TABLE 3.3

TABLE 4.1

Analog Channel	Connector Pin	Parameter	Estimated Value
ASE 7-1	26	HET Temp	-
2	10	VLET-2 Temp	-
3	27	Det.Mnt.Plate Temp	-
4	11	X-ray det. Temp	-
5	28	TBSP-1 Temp	-
6	12	TBSP-2 Temp	-
7	29	Electronics Temp	-
8	13	Base Plate Temp (Rear)	-
9	30	+12 V. Monitor	~4.4V
10	14	+6 V. Dig. Monitor	~4.4V
11	31	+6 V. Ana. Monitor	~4.4V
12	15	+7.75 V. Monitor	~4.4V
13	32	+4.7V	~4.6V
14	16	Base Plate Temp (Front)	

Expected values for temperature channels vary with ambient conditions and from unit to unit. No operational constraints based on these values will be imposed during testing.

5.1 Line Printer

It is required that data be displayed on the line printer in at least four different formats as described below.

5.1.1 Line-by-Line Display

Each 48 bit block should be printed in chronological order as they appear in telemetry. The component parts of each block should be separated and identified with appropriated legends on the page, and should be converted from binary to decimal or, for rate words, from log to decimal. If the printer page is wide enough (~130 columns) it would be most convenient if the rate data could be on one side of the page and the PHA data on the other side as shown in the suggested format, figure 5.1.1.

Each block results in one line of printout with only the data within that block entered on the page. Proper sequencing of the experiment readout may be easily determined from this format.

This format contains the following entries:

FR No. - frame number from the S/C frame counter in which block was transmitted.

Line No. - same as in figure 2.1.b, rate data block description

S.S. ID - The sectored rate sequence ID contained in DS 2, 3, and 4 of rate data blocks, lines 9-16

U.S.S. ID - The unsectored rate sequence ID from rate data blocks

Rate Word - The contents of the appropriate rate word should be converted from binary log to decimal fixed point form and displayed. Seven columns are required. Each rate word should also be identified by its appropriate symbol as shown in figure 2.1.a.

F.R. No.	Line No.	S.S. ID	U.S.S. ID	Rate Word 4 ID	....	A/CHI/DI	B/DII	CHCHI/E	H/L	ET	R	S
xxxx	xx		x	R12 xxxxxxx	etc.							
xxxx						xxxx	xxxx	xxxx	x	x	x	x
xxxx	xx	x		SR1A(1) xxxxxxx								

16 columns each for rate words 3, 2, and 1

Figure 5.1.1

A/CIII/DI - The contents of PHA word 1 from either HET or LET blocks, converted from binary to decimal and incremented by one.

B/DII - The contents of PHA word 2, as above.

CI+CII/E - The contents of PHA word 3, as above.

H/L - Indicates if the PHA data in that line is from HET or LET as specified by bit 47 of the PHA block.

ET - Event type designator, can be 0, 1, 2, or 3 for HET (tag bits HT6 HT7) or 0,1 for LET (tag bit LT6)

R - The range bit, 0 or 1, located in HT8, applies only to HET blocks.

S - The decimal equivalent of the S1 and S2 bits in either H or L tages.

- - Five additional columns should be reserved for the remaining tag bits and each should be displayed separately.

5.1.2 Accumulated Rate Data Dump

At the end of each rate data accumulation interval in the computer, the processed data should be listed, identifying each rate total and computed average counts/sec by the notation used in 2.1.b (R1A etc.). Also included should be the frame number in which the accumulation interval started and ended, and the total elapsed time in minutes and number of frames. The number of columns required is approximately 5 for the legend, 8 for the total counts, and 5 for the computed average.

5.1.3 Accumulated PHA Data Dump

At the end of each PHA accumulation interval in the computer, the contents of each of the 51 channels for each of seven spectra should be listed. This will require 7x5=35 columns. Each column should of course, be labled at the beginning. The frame number in which the accumulation period started and ended, and the number of frames and elapsed time should also be shown. At the end of the spectra listings, the contents of the book-keeping channels should be listed with appropriate labels.

5.1.4 Engineering Data

Analog Engineering data may be listed by identifying each quantity and then showing the value either in octal or decimal. The digital word should be listed so that the status of each command may be readily determined either bit by bit or in octal. Converting this word to decimal is not desirable.

5.2 Cathode Ray Tube (CRT)

The CRT formats should essentially follows the requirements of 5.1.1 through 5.1.4 above, but the line by line display must be abbreviated significantly. It is suggested that the legends be eliminated, but that the data always be listed beginning with rate line 1 so that the user can, by familiarity, find a specific data word if desired. Frame number could also be detected, but SS ID and US ID must remain.

5.3 Stripchart Recorder (STC)

No requirement.

[illegible]	Rate Word 4 Bits 1-12	Rate Word 3 Bits 13-24	Rate Word 2 Bits 25-36	37	38	39	40	41 DS 4	42 DS 3	4 D
1	S-XR(1)	S-XR(2)	S-XR(3)	(MSB) .... X-Ray Comd. Reg. ..						(LS
2	S-XR(4)	S-XR(5)	S-XR(6)	X4	X3	X2	X1	(MSB)		(LS
3	S-XR(7)	S-XR(8)	USXR(R20)	R9 a or b				Unsectored Rate Sequence ID		
4	R16	R18	R19	C5	C4	C3	C2			
5	R2	R3	R4	XSDRM	SWB X-Ray Xeq. Reg.	$\overline{16}$	$\overline{8}$	$\overline{4}$	$\overline{2}$	$\overline{1}$
6	R5	R6	R7	X4	X3	X2	X1	(MSB)		(L
7	R8	R10	R11	R1				Unsectored Rate Sequence ID		
8	R12	R13	R15	C5	C4	C3	C2			
9	SR1-(1)	SR2-(1)	SR3-(1)					(MSB)		(LS
10	SR1-(2)	SR2-(2)	SR3-(2)	X4	X3	X2	X1	Sectored Rate Sequence ID		
11	SR1-(3)	SR2-(3)	SR3-(3)	R14						
12	SR1-(4)	SR2-(4)	SR3-(4)	C5	C4	C3	C2			
13	SR1-(5)	SR2-(5)	SR3-(5)							
14	SR1-(6)	SR2-(6)	SR3-(6)	X4	X3	X2	X1			
15	SR1-(7)	SR2-(7)	SR3-(7)	R17						
16	SR1-(8)	SR2-(8)	SR3-(8)	C5	C4	C3	C2			

RATE DATA BLOCKS

HELIOS COSMIC RAY EXPERIMENT (E

1 2 36	37	38	39	40	41 DS 4	42 DS 3	43 DS 2	44 D	45 C	46 B	47 A	48 ID	
	(MSB)	X-Ray Comd. Reg. ..					(LSB)	0	0	0	0	1	0
	X4	X3	X2	X1	(MSB)		(LSB)	1	0	0	0	1	1
)		R9 a or b			Unsectored Rate Sequence ID			0	1	0	0	1	2
	C5	C4	C3	C2				1	1	0	0	1	3
	XSDRM	SWB X-Ray	$\overline{16}$ Xeq.	$\overline{8}$ Reg.	$\overline{4}$	$\overline{2}$	$\overline{1}$	0	0	1	0	1	4
	X4	X3	X2	X1	(MSB)		(LSB)	1	0	1	0	1	5
		RI			Unsectored Rate Sequence ID			0	1	1	0	1	6
	C5	C4	C3	C2				1	1	1	0	1	7
					(MSB)		(LSB)	0	0	0	1	1	8
	X4	X3	X2	X1	Sectored			1	0	0	1	1	9
		R14			Rate			0	1	0	1	1	10
)	C5	C4	C3	C2	Sequence			1	1	0	1	1	11
)					ID			0	0	1	1	1	12
)	X4	X3	X2	X1				1	0	1	1	1	13
)		RI7						0	1	1	1	1	14
)	C5	C4	C3	C2				1	1	1	1	1	15

RATE DATA BLOCKS

S COSMIC RAY EXPERIMENT (E-7)

The GSFC Cosmic Ray Experiment on Helios A/B outputs minor frame data of two basic types, referred to as Rate Data and PHA data. Rate data is simply a 12 bit binary number, packed four numbers to a block which represents the total number of times per accumulation interval that signals exceeding specified amplitudes from one or more detectors in each sensor array (telescope) occurred in coincidence. These rate events are counted (accumulated) in a 24 bit counter for a period of time dependent on bit rate and mode of S/C operation in use. Prior to transmission, data from each 24 bit counter is compressed to 12 bits by converting the number to its logarithm. After receipt of rate data on the ground, the log in each 12 bit rate word is converted back to its integer equivalent and divided by the length of the accumulation interval to yield counts per unit time.

PHA data represents the digitized amplitude of each of three specified detector signals appearing in coincidence. The Pulse Height Analyzer resolves the amplitude of each pulse into one part in 1024 (10 bits). Each amplitude is transmitted in binary form as 12 bit word. Each PHA readout is a quasi-randomly selected coincidence event during the accumulation interval and the data represents the amplitudes of the three detector signals rather than the number of events per unit time. Each PHA event is packed in one 48 bit block.

The ratio of PHA data to rate data is dependent upon the S/C mode and bit rate in use. The readout format is not necessarily synchronous * with the modulo-72 major frame sequence. Hence, each 48 bit block contains identifying bits which uniquely identify the type and source of data in that block. At high bit rates (4096 and 2048 bps.) the ratio of PHA data to rate data can be as high as 7 to 1 (i.e. 7 each 48 bit PHA blocks for each 48 bit rate block). At 1024 through 256 bps, the ratio is 3:1. At still lower bit rates the ratio drops to 1:1 and at the lowest bit rates as well as blackout mode, all PHA data and selected rate data is excluded from readout.

Rate Data Format

Rate data is packed in 48 bit blocks as shown below. All rate data is ordered most significant bit (MSB) first in time and the ID bits are ordered LSB first. The bits are numbered in the order they appear in time, and have the following significance:

Bit #	
48	Always a "1" for rate data, always a "0" for PHA data
44-47	A,B,C,D are 4 four bits from a modulo-16 counter (A=MSB), specifying one of 16 possible "lines" of rate data. Each line contains 3 1/3 rate words, or 3 words and 4 discreet bits.
41-43	DS2 through DS4 are discrete identifying bits which specify the commutator position for each of the rate words in that block.
37-40	The 4 bits are either DS bits or rate data bits as specified by the line number (bits 44-47). See Figure 2. Four rate counters are readout, in lines 2-4, 6-8, 10-12, and 14-16.
25-36	All 12 bits of word 2 of the specified line.
13-24	All 12 bits of word 3 of the specified line.
1-12	All 12 bits of word 4 of the specified line.

The 12 rate data bits are designated X1, X2, X3, . . . X7, C1, C2, . . . C5 and represent the true binary log of the number of counts accumulated. The X's are the bits of the mantissa and the C's are the bits of the characteristic.

Each 48 bit block contains three complete rate words (words 4, 3, and 2) and either 1/3 of another rate word (word 1) or discreet bits. When word number is combined with line number, one of 48 rate counters is specified in words 4, 3, or 2. Word 1 is distributed through 3 lines, hence 3 consecutive lines are required to read out each word 1. There are 4 additional counter readout in lines 1 through 16. The total number of rate counters is thus 48 plus 4, or 52. Each counter may be commutated through 1, 2, 4, or 8 different coincidence conditions or, in the case of sectored counters, may also be associated with only one 45° increment as the S/C spins. Commutation levels are specified in the discreet bits DS2 through DS8.

Hence, each individual coincidence rate can be uniquely specified only by the combination of line number, word number, and commutation level. There are 230 such unique rates. In the ground computer, each must be extracted from the data converted to integer form, and summed with previous readouts of the same rate to maintain a running total. At the completion of a specified accumulation interval, the summed number of counts in each rate location is divided by the accumulation interval to yield counts per unit time.

Conversion from the logarithm to the integer number may be accomplished as follows. Attached is a drawing of the "MARS" bug, drawing GE-1154-047. This is the electrical performance specification for the accumulator and log compression used in all 52 rate counter positions of the GSFC Experiment. Equation III defines the log and gives the arithmetic relationship that may be used for conversion. However, it is suggested that simply reversing the compression scheme will provide extremely rapid conversion with very few instructions.

Refer to the option 1 logic diagram (upper left). The A reg is a 24 bit binary counter which counts input pulses when permitted by the F and $\angle_0$ functions. The reset condition of this register is all "1"s, hence the first pulse counted produces all "0"s, the second produces 10000000, etc. At the end of an accumulation interval, the log compressor shifts right the A reg until a "1" appears in the MSB. The next 7 bits, not including the MSB, which is always a "1", are read out as X1 - X7, and the number of shifts is read out as C1 - C5.

To convert a log back to real, first replace the most significant "1" of the mantissa lost during readout, and then shift the appropriate number of shifts as read out in C1 - C5. Then add 1 to account for the reset condition of the A reg. For example, after 6 counts the A reg contains 101000 . . . (total of 24 bits). LSB is in the left. There are 21 leading zeros on the right to be shifted out of the way until A3 appears at the end of the shift register. X1 - X7 will read 0000010(1), where the "1" in A3 which was lost is shown in parentheses. C1 - C5 will contain 21 in binary. To re-convert:

(1) Shift left X1 - X7 once, adding the "1" which was lost.
    Now X1 - X7 - 0000101.

(2) Shift left 21 times, entering 21 zeros from the right.
    We now have 0000101 plus 21 zeros:

$$0000101 \quad \underbrace{000\ .\ .\ .\ .\ 0}_{21}$$

(3) Truncate from the left to leave 24 places, right justified, including the 21 zeros. Contents of the A reg has not been restored. LSB is still on the left.

(4) Add 1 to give 011000 . . . , the binary equivalent of 6.

All the above was done referencing the bit field as it appears in the drawing. However, during readout the bits are reversed so that they are read out differently and hence will appear in core differently. For 6 input counts, readout is C5, C4, C3 . . . C1, X7, X6 . . . X1. C5 through C1 (the characteristic) will contain 21, or 11001 (MSB first). X7 through X1 is the mantissa and contains 0100000 (X7 is on the left). The readout of the rate word thus appears in Telemetry as

110010100000

To convert:

(1) Shift right double (i.e., so that the mantissa is entered into another register and saved) seven times entering 0's from the left. This separates the characteristic and the mantissa, leaving the characteristic right justified and the mantissa left justified in two adjacent words.

(2) Shift right the mantissa once, entering "1" from the left. The mantissa is now 101000 . . . for the remainder of the computer word field.

(3) Shift right again, entering 0's from the left, the number of times indicated in the characteristic.

(4) Shift right again to right justify the 24 bit reconstructed field in the computer word. This number of shifts is the computer word length minus 24. The rate word is now in integer form.

(5) Add 1 to the shifted word, and the result is the binary equivalent, in 24 bits, of the total number of counts counted.

For the above algorithm the amount of machine manipulation and coding is small compared to all the arithmetic implied by equation III. There are a few special cases that perhaps are best handled separately, as shown in the notes below the equation in drawing GE-1154-047.

PHA Data Format

Each Pulse Height Analysis event is packed in a single 48 bit block. The block is uniquely identified as being PHA data by bit 48. The block contains three 12 bit amplitude words from either the High Energy Telescope (HET, or E7A) or the Low Energy Telescope (LET, or E7C) and appropriate tag bits specifying more information about the event. Each of the amplitude words is a binary digitization of the pulse amplitude from the corresponding detector. X12 is the MSB and X1 is the LSB. The bits are numbered in the order they appear in time and have the following significance:

Bit #	
48	Always a "0" for PHA data; always a "1" for rate data.
47	H/L bit indicates if PHA data is a HET event (H/L=0) or a LET event (H/L=1).
44-46	T3, T4, and T5 are the sector tags. The orientation of the S/C at the time of each PHA event is encoded in these bits (T3 is MSB) into octants (45°).

Bit#	
37-43	To be specified. Depends on whether data is HET or LET. If HET, Tag bits T6 & T7 specify one of 4 possible coincidence conditions initiating the analysis. The detector pulse digitized in PHA word 1 from the A element of HET if T6=0, and is from the CIII e/event of HET if T6=1. Remaining bits not yet assigned.
25-36	PHA data word 1; 12 bits. If HET event, is amplitude of A or CIII (see T6). If LET event, is amplitude of DI.
13-24	PHA data word 2; 12 bits. If HET event, is amplitude of B. If LET event, is amplitude of DII.
1-12	PHA data word 3; 12 bits. If HET event, is amplitude of (C1 + CII). If LET event, is amplitude of E.

Each amplitude word originates from a 12 bit counter which is reset to all "ones". A channel 1 event toggles each counter stage, producing a readout of all "zeros" for that word. A channel 2 event reads out as 1 (decimal), etc. Each amplitude word must be incremented by 1 in the ground computer to produce the correct amplitude.

There are 7 detectors which are pulse height analyzed. Word one of HET data is shared between the H and CIII elements. The remaining PHA words are uniquely assigned as listed above. The ground computer is required to accumulate frequency histograms representing the number of times each channel number for each detector is read out in the data. Thus, 7 different 1024 channel histograms are required for a total of 7168 computer locations. If core space does not permit such large data bases, each of the seven histograms may be reduced to 256 channels in length by subtracting a number (eg. 0, 255, 511, 767) from the PHA data words. This effectively allows accumulation of a specified quadrant of the full 1024 field. Quadrant specification should be a variable to be entered via keyboard immediately prior to starting an accumulation interval. In this event, two additional channels which accumulate the number of events falling below and above the specified quadrant are also required. The count capacity of each histogram channel should be at least 12 bits, preferably 16.

All PHA data, before it is accepted for inclusion in the histograms, may be required to conform to specified parameters in the Tag bit field T3 - T12. It is required that an operator be able to specify immediately prior to an accumulation interval the conditions defining an acceptable event. In general, no conditions are imposed but it is desirable during muon tests or trouble shooting to have the flexibility of pre-screening each event before including it in the histogram. The total number of events excluded from each histogram should also be counted in another computer word.

line	Rate Word 4	Rate Word 3	Rate Word 2	37	38	39	40	41 DS 4	42 DS 3	43 DS 2	44 D	45 C	46 B	47 A	48 ID	
1	S-XR(1)	S-XR(2)	S-XR(3)	X-Ray Exec. Reg.							0	0	0	0	1	1
2	S-XR(4)	S-XR(5)	S XR(6)	C5	C4	C3	C2	U-Sectored Rate Seg. ID			1	0	0	0	1	17
3	S-XR(7)	S-XR(8)	US XR (R20)	R9a or R9b				MS B	"	LS B	0	1	0	0	1	9
4	R16	R18	R19	X4	X3	X2	X1		"	9 → R9A	1	1	0	0	1	25
5	R2	R3	R4						"	↓ R9B	0	0	1	0	1	5
6	R5	R6	R7	C5	C4	C3	C2		"		1	0	1	0	1	21
7	R8	R10	R11	R1					"		0	1	1	0	1	13
8	R12	R13	R15	X4	X3	X2	X1		"		1	1	1	0	1	29
9	SR1-(1)	SR2-(1)	SR3-(1)	Roll Writer MSB's				Sectored Rate Seg. ID			0	0	0	1	1	3
10	SR1-(2)	SR2-(2)	SR3-(2)	C5	C4	C3	C2		"		1	0	0	1	1	19
11	SR1-(3)	SR2-(3)	SR3-(3)	R14					"		0	1	0	1	1	11
12	SR1-(4)	SR2-(4)	SR3-(4)	X4	X3	X2	X1		"		1	1	0	1	1	27
13	SR1-(5)	SR2-(5)	SR3-(5)	Roll Writer LSB's					"		0	0	1	1	1	7
14	SR1-(6)	SR2-(6)	SR3-(6)	C5	C4	C3	C2		"		1	0	1	1	1	23
15	SR1-(7)	SR2-(7)	SR3-(7)	R17					"		0	1	1	1	1	15
16	SR1-(8)	SR2-(8)	SR3-(8)	X4	X3	X2	X1		"		1	1	1	1	1	31

ROUTE SHEET

CODE	BLDG. ROOM	NAME	PURPOSE*	INITIALS	DATE	REMARKS
565		E. Beard		EB	6/20	
565		J. M. Stockwell		EB	6/20	
565		M. Mahoney			6/26	JUN 21
663		J. H. Trainor				To Don Stilwell Clar Dickerson 7/8

SOURCE/SENDER
E. Beard

IDENT. SYMBOL & DATE
565:4360M:EB:lmm

*** PURPOSES**

1. FOR INFORMATION
2. FOR APPROVAL
3. PREPARE REPLY
4. PREPARE ENDORSEMENT
5. FOR NECESSARY ACTION
6. FOR SIGNATURE
7. RETAIN ENCLOSURES
8. RETAIN COPY

MAILROOM USE ONLY

SUBJECT
HELIOS-A O/A EDR Format

FORWARDED BY
Telemetry Computation Branch

DATE FORWARDED
June 20, 1974

EXT.
6017

CODE
565.2

BLDG.
23

GSFC 11-20 (10/64)

OPTIONAL FORM NO. 10
MAY 1962 EDITION
GSA FPMR (41 CFR) 101-11.6
UNITED STATES GOVERNMENT

Memorandum

TO : Dr. J. H. Trainor
Instrumentation Branch, LFHEA, S&ESD, 663

DATE: June 20, 1974

FROM : Mr. E. Beard
Telemetry Computation Branch, IPD, M&DOD, 565.2

SUBJECT: HELIOS-A O/A EDR Format

Attached is the updated HELIOS-A Orbit/Attitude EDR format. Also enclosed is an example of the listing of command data you will receive.

Earl Beard

Earl Beard
Project Computation Section

565:4360M:EB:lmm

Dr. J. H. Trainor
Instrumentation Branch, LFHEA, S&ESD, 663

June 20, 1974

Mr. E. Beard
Telemetry Computation Branch, IPD, M&DOD, 565.2

HELIOS-A O/A EDR Format

Attached is the updated HELIOS-A Orbit/Attitude EDR format. Also enclosed is an example of the listing of command data you will receive.

Earl Beard
Project Computation Section

565:4360M:EB:lmm

JUN 0 3 1974

HELIOS-A
EDR
ORBIT/ATTITUDE
TAPE FORMAT

- The general format of the orbit/attitude (ORB/ATT) EDR is a label record followed by records of ORB/ATT data.

- The label record (attached) will consist of 72 characters, written in IBM BCD tape format, odd parity.

- The ORB/ATT parameters for HELIOS are shown as items 1-162 on the attached sheets.

- These parameters will appear on the ORB/ATT EDR in the same order as they are on the attachments.

- Each item in the data record is a UNIVAC 1108 double precision word (72 bits).

- The ORB/ATT EDR will be written on seven (7) track, 800 BPI magnetic tape.

- An ORB/ATT data record = 162 double precision words.

- Each record contains data for one point. The distance between two time points is:

    - 6 minutes for a distance of Earth-Helios less than one million kilometers and,

    - 60 minutes for distance more than one million kilometers.

DEC 12 1973

HELIOS-A

EDR

ORB/ATT LABEL

FORMAT

This label will preceed all files on the ORB/ATT EDR. The label will consist of 78 characters.

Labels will be written in IBM BCD tape format, odd parity.

1 - 7 + Space	International Code
9 - 11	Tape Type (ORB)
12 - 23	Spaces
24 - 25 + Space	Year of Recording (last 2 digits)
27 - 29 + Space	File Start Time (DAY)
31 - 36 + Space	File Start Time (HHMMSS)
38 - 40 + Space	File Stop Time (DAY)
42 - 47 + Space	File Stop Time (HHMMSS)
49 - 52 + Space	O/A Master Data Tape Number
54 - 55 + Space	O/A Master Data Tape File Number
57 - 62 + Space	Date O/A EDR generated
64 - 66 + Space	O/A EDR Run Number
68 - 69 + Space	O/A EDR File Number
71 - 72 + Space	O/A EDR Reel Number
74 - 76	Experimenter ID
77 - 78	Spares

JUN 03 1974

HELIOS A
ORB/ATT EDR
DATA RECORD
FORMAT

Time Block

1. Julian date, ephemeris time
2. Time in seconds past January 1, 1950, ephemeris time
3. Year
4. Month
5. Day
6. Hour
7. Minutes

(3.–7.) of Gregorian calendar date

8. Seconds
9. Time from launch in seconds
10. ET - UTC, in seconds
11. ΔT (Time difference between Orbit and Attitude calculations)
12. Status switch
    0 = both Orbit & Attitude data present
    1 = Orbit data only
    2 = Attitude data only
13. Spare

Heliocentric Block

14. x
15. y
16 z

Position coordinates of Helios in A. U.

17. U_x
18. U_y
19. U_z

Velocity coordinates of Helios in A. U./DAY

20. - 25. Same as above for Mercury
26. - 31. Same as above for Venus
32. - 37. Same as above for Earth
38. - 43. Same as above for Mars

Mean ecliptic and equinox of 1950 July 1, 0 hours.

JUN 03 1974

Heliocentric Block cont'd

44. - 49. Same as above for Jupiter
50. - 55. Same as above for Moon

Mean ecliptic equinox of 1950, July 1, 0 hrs.

56. Ecliptical longitude, counted from Mean Equinox
57. Ecliptical longitude, counted from Earth-Sun line
58. Ecliptical latitude of
59. Distance in A. U. of Sun -

Helios

60. - 63. Same as above for Mercury
64. - 67. Same as above for Venus
68. - 71. Same as above for Earth
72. - 75. Same as above for Mars
76. - 79. Same as above for Jupiter
80. - 83. Same as above for Moon

84. Radial velocity
85. Normal velocity

of Helios in A. U./ DAY.

86. Heliographic Longitude of Helios, counted from the Ascending Node
87. Heliographic latitude of Helios

Number of rotations of the Sun,

88. referred to the Earth
89. referred to Helios

at 16° heliographic latitude since launch

Geocentric Block

90. Right Ascension of
91. Declination of
92. Distance in A. U. of Earth

Helios

93. - 95. Same as above for the Moon
96. - 98. Same as above for the Sun

True Earth Equator and Equinox of date

JUN 0 3 1974

99. Radial velocity of
100. Normal velocity of

Helios in A. U./ DAY

101. x
102. y
103. z

Position of

104. U_x
105. U_y
106. U_z

Velocity of

Helios

107.- 112.. Same for the Sun
113. Solar ecliptical latitude of Helios
114. Solar ecliptical longitude of Helios

Mean ecliptic and
equinox of 1950
July 1, 0.0 hours.

115. x
116. y
117. z

Solar Magnetospheric Coordinates
of Helios

Distances Block

118. Helios - Mercury
119. Helios - Venus
120. Helios - Earth
121. Helios - Mars
122. Helios - Jupiter
123. Helios - Moon
124. Helios - Moon Orbit

in A. U.

Angles Block

125. Earth - Helios - Sun
126. Helios - Sun - Earth

in degree

JUN 0 3 1974

Angles Block (cont'd)

127. Sun - Earth - HELIOS In Degrees

128. HELIOS - Earth - Moon

129. Ecliptic Plane - (Earth - Helios) Line

130. Right Ascension of Orbit Pole

131. Declination of Orbit Pole

Attitude Block

132. Flag for Blackout

133. Solar Aspect Angle

134. 3-Sigma Value of the Solar Aspect Angle

135. Pitch Angle

136. 3-Sigma Value of the Pitch Angle

137. Angle Between Z-Axis and Orbit-Plane

138. Mercury Aspect Angle (Angle between Z-Axis and HELIOS - Mercury Line)

139. Venus Aspect Angle

140. Mean Spin Rate

141. Ecliptical Longitude of S/C - Spin Axis

142. Ecliptical Longitude of S/C - Spin Axis Counted from Earth - Sun Line

143. Ecliptical Latitude of S/C - Spin Axis

144.
145. First Row (A_{11} A_{12} A_{13}) of the
146.
147.
148. Second Row (A_{21} A_{22} A_{23}) of the
149.
150.
151. Third Row (A_{31} A_{32} A_{33}) of the
152.

Matrix from S/C Spin Axis - Sunline Coordinates to Heliographic Coordinates

153.
154. First Row (A_{11} A_{12} A_{13}) of the
155.
156.
157. Second Row (A_{21} A_{22} A_{23}) of the
158.
159.
160. Third Row (A_{31} A_{32} A_{33}) of the
161.

Matrix from S/C Spin Axis - Sunline Coordinates to Solar Ecliptic Coordinates

162. Spare

HELIOS-A

COMMAND LISTING

Attached is an example of the Command listing to be provided each U.S. Experimenter. Items on the example are explained below:

1. This item provides information on the tape from which the commands were extracted

2. The time of transmission of the first bit of the command from the station.

3. The command number in octal

4. Alpha characters describing the command

5. S/C receipt time of first command bit.

6. Station sending the command

7. Resolution of the command (confirmed, aborted, or undetermined).

HELIOS A
COMMANDS

```
          TAPE    * START TIME    * REC     BLOCK                MDR    MDR   MDR  DATE
  SAT ID  REEL N  HH MM SS  DAY YY  SIZE    SIZE   NETWORK  T NUM  FILE  MM  DD  YY

① HEACMD  000467  10 31 45  304 74   144     144     GCC      00001   02    02  22  74

        ②              ③          ④             ⑤            ⑥           ⑦

      TRANSMIT        OCT      COMMAND        S/C RECD       DSS
      HH MM SS        CMD    DESCRIPTION      HH MM SS       TCP       RESOLUTION

      10 31 45        301     XXXXXXXX        10 31 53       68A       CONFIRMED
      10 31 45        301     XXXXXXXX        10 31 53       68A       CONFIRMED
      10 31 45        301     XXXXXXXX        10 31 53       68A       CONFIRMED
      10 31 45        301     XXXXXXXX        10 31 53       68A       CONFIRMED
      10 31 45        301     XXXXXXXX        10 31 53       68A       CONFIRMED
      10 31 45        301     XXXXXXXX        10 31 53       68A       CONFIRMED
      10 31 45        301     XXXXXXXX        10 31 53       68A       CONFIRMED
      10 31 45        301     XXXXXXXX        10 31 53       68A       CONFIRMED
      10 31 45        301     XXXXXXXX        10 31 53       68A       CONFIRMED
      10 31 45        301     XXXXXXXX        10 31 53       68A       CONFIRMED
      10 31 45        301     XXXXXXXX        10 31 53       68A       CONFIRMED
      10 31 45        301     XXXXXXXX        10 31 53       68A       CONFIRMED
      10 31 45        301     XXXXXXXX        10 31 53       68A       CONFIRMED
      10 31 45        301     XXXXXXXX        10 31 53       68A       CONFIRMED
      10 31 45        301     XXXXXXXX        10 31 53       68A       CONFIRMED
      10 31 45        301     XXXXXXXX        10 31 53       68A       CONFIRMED
      10 31 45        301     XXXXXXXX        10 31 53       68A       CONFIRMED
      10 31 45        301     XXXXXXXX        10 31 53       68A       CONFIRMED
      10 31 45        301     XXXXXXXX        10 31 53       68A       CONFIRMED
      10 31 45        301     XXXXXXXX        10 31 53       68A       CONFIRMED
      10 31 45        301     XXXXXXXX        10 31 53       68A       CONFIRMED
      10 31 45        301     XXXXXXXX        10 31 53       68A       CONFIRMED
      10 31 45        301     XXXXXXXX        10 31 53       68A       CONFIRMED
      10 31 45        301     XXXXXXXX        10 31 53       68A       CONFIRMED
      10 31 45        301     XXXXXXXX        10 31 53       68A       CONFIRMED
      10 31 45        301     XXXXXXXX        10 31 53       68A       CONFIRMED
      10 31 45        301     XXXXXXXX        10 31 53       68A       CONFIRMED
      10 31 45        301     XXXXXXXX        10 31 53       68A       CONFIRMED
      10 31 45        301     XXXXXXXX        10 31 53       68A       CONFIRMED
      10 31 45        301     XXXXXXXX        10 31 53       68A       CONFIRMED
      10 31 45        301     XXXXXXXX        10 31 53       68A       CONFIRMED
      10 31 45        301     XXXXXXXX        10 31 53       68A       CONFIRMED
      10 31 45        301     XXXXXXXX        10 31 53       68A       CONFIRMED
      10 31 45        301     XXXXXXXX        10 31 53       68A       CONFIRMED
      10 31 45        301     XXXXXXXX        10 31 53       68A       CONFIRMED
      10 31 45        301     XXXXXXXX        10 31 53       68A       CONFIRMED
      10 31 45        301     XXXXXXXX        10 31 53       68A       CONFIRMED
      10 31 45        301     XXXXXXXX        10 31 53       68A       CONFIRMED
      10 31 45        301     XXXXXXXX        10 31 53       68A       CONFIRMED
      10 31 45        301     XXXXXXXX        10 31 53       68A       CONFIRMED
```

PART I

HELIOS EXPERIMENT 7

TITLE: COSMIC RAY EXPERIMENT

PRINCIPAL INVESTIGATOR: DR. JAMES H. TRAINOR

TABELE OF CONTENTS

Contents

Page

EXPERIMENT DESCRIPTION

I. Physics of the Experiment

The E7 charged particle experiment consists of 3 sensor systems for the measurement of charged particles (E7A, E7B and E7C), plus a gas proportional counter (E7D) which predominantly responds to X-ray photons in the energy range 2 to 8 KeV. The charged particle detector systems are made up of from 4 to 7 silicon diodes operated with a reverse bias adequate to fully deplete the diodes. If a charged particle passes through a diode, ionization along the path through the detector results in hole-electron pairs being formed along this path. The applied electric field (detector bias voltage) causes the charge to be swept up, forming a charge pulse which is then accurately measured by the electronics.

In the most usual case, several detectors will be penetrated by the charged particle, so that a particular event is usually characterized by several specific energy losses plus a range measurement. From ground calibration, one is able then to relate this information to an element or isotope of an element at a precise energy. Figure 1 summarizes the response of experiment E7 as a function of energy and charge. Positive ions are well covered through Neon (Z=10). The experiment measures the time history, energy spectra and angular distribution of these particles.

The gas proportional counter really is two independant counters sharing one pressure vessel. The primary X-ray data is obtained through a very narrow collimator (0.2865°). Using on-board electronics, one can accumulate data in 8 sections of 0.17° or 0.34° centered on the sun. Since the sun subtends an angle of ∿ 0.5° at launch and ∿ 1.7° at 0.3 AU, such a system allows us to crudely monitor and locate sources of solar activity, even on the side of the sun not visible from earth.

The second aperature of the proportional counter is viewed by means of a 53° collimator which is also covered by two aluminized kapton foils. These foils prevent the entrance of low energy X-rays, and this counter is used to monitor detector background, as well as low energy solar electrons. This data is sectored 8 times with respect to 360° of spacecraft rotation.

II. Hardware Description

A. Mechanical Configuration.

Figure 2 gives top and side views of the experiment, including the outer wall of the spacecraft, through which the sensors view. E7A is the high energy telescope (HET), a nuclear particle telescope with proper response and operation for particles entering through either the front or rear conical field of view. Thus, of necessity, E7A is mounted in a small box protruding from the main spacecraft wall in the +X direction.

E7B or the very low energy telescope (LET-2) actually consists of two identical sensor systems with 30° conical field of views. These sensors are tilted 20° above and below the equatorial plane containing the sun as shown in the side view. As a result, the sun is not able to illuminate the first sensor of E7B; we do not require a thermal foil over E7B; and thus we may measure very low energy protons and alpha particles.

E7C is the low energy telescope 1 (LET-1) with a response intermediate between E7A and E7B. This telescope has a conical field of view of 50° which is covered by a 6.4 micron foil of aluminized Kapton. The gas proportional counter is directly beside E7C and has already been adequately described. The rectangular electronics box is immediately inboard of the various detector assemblies.

B. E7A Sensor System

The E7A sensor system is shown schematically in Figure 3. Charge pulses are converted to voltage pulses; shaped and amplified as necessary; and if the proper logic conditions are satisfied, the proper linear gates are opened and the pulse height is digitized to 10 bits.

A number of tag bits are also necessary to completely describe the event. At the bit rates to be expected, the experiment will often only be sampling the solar and galactic cosmic ray fluxes in the pulse height analysis (PHA) mode. In addition, several rates are noted in Figure 3 which are routinely monitored for rapid time histories, normalizations of the PHA data and angular distributions. E7A also contains a rolling priority system which enables the emphasis of rare events in the data. Figure 4 shows the E7A sensor system in more detail, particularly the logical and physical definitions of the E7A rates which will be described further later in this document.

C. E7B Sensor System

Figure 5 outlines the E7B sensor system. In this relatively simple system charge pulses are converted to voltage pulses, amplified and shaped, and presented to a series of 4-level integral analyzers (4-step, programmable threshold discriminators). A large number of logical rates are formed (R15, R16, R17, SR2a and SR2b) and commutated as detailed in the logic equations in Figure 5.

D. E7C Sensor Systems

The E7C system is shown in Figure 6 and in many ways is a simple version of E7A. Particle entry is possible only through the front field of view (F events are always logically excluded) and the condition for PHA analysis is $D_1 D_2 \overline{F}$, and the output pulses from D_1, D_2 and E are pulse height analyzed to 10 bits accuracy. The various tag bits are identified on the figure as well as the various rates which are monitored. Figure 7 shows the E7C system with a higher level of detail, including an 8-level intergral analyzer monitoring low energy protons and alpha particles in D.

E. The E7D Proportional Counter System

In this detector system the pulses are amplified, and those corresponding to 2 to 8 KeV deposited in the detectors are selected and counted. Events from the narrow angle collimator are commutated into 8 counters corresponding to 8 narrow strips centered on the sun, while those events from the wide collimator window are counted in the unsectored X-ray counters (USXR).

F. Commands and Housekeeping Data

This area of discussion is rather involved and is discussed in some detail in the next chapter.

III. Functional Description

A. Commands

1. C 047 High Voltage ON/OFF (HiV.)

A separate 12 volt to 1700 volt DC converter provides high voltage to the X-ray proportional counter (E7D). The 12 volt input is energized through a transistor switch controlled by a flip-flop in the data system. The state of the flip-flop is reset to "0" = OFF when power is first applied to the experiment. Commands C 047 are applied to the clock input; hence each command received toggles the control flip flop from its present state to the complement. The High Voltage supply may be turned either on or off by successive applications of this command. The state of the flip flop is readout in bit 5 of the status word (bit 1 is MSB).

2. C 351 Force Black-Out Mode (FBOM)

When the S/C is in the Black-Out Mode (as determined by DM bit 3, i.e. DM 4, 5, 7) the experiment data system deletes all PHA data from the science output data stream. Since this ordinarily happens only at 8 BPS, the FBOM command was included in the experiment to permit checkout of this mode of operation in the S/C at any bit rate, and also to provide more rapid operation of the experiment through its complete data sequence (EDF) at all bit rates. A single flip-flop in the data system determines whether or not E-7 is in the BOM. This flip-flop is not reset when power is applied, and hence may come on in either state. Whenever DM bit 3 is a "1" indicating DM 4, 5, or 7 the flip-flop is reset, forcing E-7 into BOM operation. During DM-4, 5, 7, the flip-flop

C347

is forced to the "0" state, and command C 351 has no effect since it is applied at the toggle input. The flip-flop will remain in the "0" state forever, even after the S/C returns to a non-blackout data mode, unless a C 351 command is applied to toggle the flip-flop back to the "1" state. When in DM 0, 1, 2, or 3, E-7 may be commanded into or out of the FBOM by successive applications of C 351. The state of the FBOM flip-flop is readout in bit 7 of the status word.

3. C 330 Sector Synchronizer ON/OFF (SS)

The data system includes three sets of eight counters each (SR1, SR2, and SR3) for accumulating sectored rate data. The accumulation interval, or "live-time," may be determined by either the read-out cycle (i.e. synchronized to telemetry), or by the sectoring signals SPO and SP11 ÷ 512. Each counter consists of a 24 bit binary counter, a log compressor, and a 12 bit storage register for data readout in a single large-scale-integrated circuit flatpack, as described in a previous section. Application of a "transfer" pulse (which is always telemetry synchronous) closes an input gate so that no more counts may be accumulated, and initiates the log compression routine which lasts $\leq$ 5 ms. The compressed data is stored in the 12 bit output register. Additional input gating insures that no input counts are applied except during a specified 45° (1/8 revolution) interval, for each of the 24 counters.

When SS in ON, the live time always begins on the first SPO after a transfer pulse. During the first 1/8 revolution, pulses to be counted are applied to SR1-1, SR2-2, and SR3-2, etc. This process continues, with all 3 SR inputs being steered to the appropriate 1-of-8 counters, of the X-ray command register with zeros. Whenever a "1" is to be entered, a DATA command C 372 will toggle the input flip-flop to "1" and the next CLK command then enters the "1". This sequence designated [372, 005] in the example to follow. Bits are entered in the order $\overline{16}$, $\overline{8}$, $\overline{4}$, $\overline{2}$, $\overline{1}$, N (SWB = Narrow = 1), D (XRSDM). If the N bit is entered as a "0", the result is a wide sector, which is designated W in the example below. The X-ray offset value is entered in complement form, i.e. entering a "0" causes that binary weight to be included in the total offset value.

To set up the X-ray command register in the state 25 WD, "0" should be entered in the $\overline{16}$, $\overline{8}$ and $\overline{1}$ bits to establish M=25, a "0" in the SWB bit establishes wide sectors, and a "1" in the XRSDM bit sets the internal self check mode On (D). When starting a sequence of CLK and DATA commands, it is useful, but not necessary, to always send an extra CLK command to ensure that the data input flip-flop is reset to "0". Verification of the flip-flop state is thus not necessary. The sequence of commands will then be:

005	reset input flip-flop
2 x 005	$\overline{16}$, $\overline{8}$ = 0
2 x [372,005]	$\overline{4}$, $\overline{2}$ = 1
005	$\overline{1}$ = 0
005	SWB = $\overline{N}$ (i.e. wide)
[372,005]	XRSDM = ON

Verification of the X-ray Command Register status is included in the science data (Rate Data Block 1, bits 37-43). The register status is not effective until transferred to the X-ray Execute Register (readout in Rate Data Block 5, bits 37-43). Transfer always occurs on

0349

possible states of the two flip-flops. The state of CAL A and CAL B are readout in bits 3 and 4 respectively of the status word.

5. C 005 X-ray clock (CLK)
   C 372 X-ray DATA (DATA)

These two commands are used in combination to serially load an 8 bit shift register in the data system. Five of the eight bits are used to establish the X-ray offset value, which is the number of SP11 pulses which will occur between the SPO pulse and the time when the narrow angle X-ray counter (E7D), which is ~ 1° wide, intersects the edge of the solar disc. This number will nominally be 104 SP11 pulses corresponding to $\frac{104}{2048}$ x 360 degrees. The offset value is preset to 88 + M, when M is the 5 bit number entered by CLK and DATA in the X-ray command and Execute Registers. Of the 3 remaining bits, one is a spare bit (SP) and is not used but must <u>always</u> be entered, one controls the width of an X-ray sector (SWB=sector width bit), and one controls the operation of the X-ray sector synchronizing system to provide a self-check of the X-ray offset value. This last bit is designated XRSDM, or more frequently D for short.

The shift register receives its data input from an input flip-flop (not part of the shift register). The DATA Command C 372 always toggles this data input flip-flop from 1 →0, or 0 →1. The state of this flip-flop is readout in bit 2 of the status word. The CLK command C 005 clocks data one stage to the right in the shift register, allowing the state of the data flip-flop to be entered from the left. C 005 also resets the data input flip-flop to zero immediately after shifting. Hence, repeated application of C 005s will eventually load all eight stages for a prescribed number of total S/C spins. The accumulation interval ends when the number of SPO's counted in a separate spin counter reaches a prescribed number, which depends on bit rate and format in use. This number was calculated using a lowest possible spin rate of 58.9 RPM to yeild a maximum live time between telemetry-synchronized transfer pulses. The SS system thus insures that the sectored rate counters are live for an exact integral number of spins.

When SS is off, the SR's are always allowed to count during their respective 45° intervals, and are always transferred to readout storage. Hence, the live times for each 45° interval are not necessarily equal.

SS ON/OFF is controlled by a flip-flop which is toggled by command C 330. The flip-flop is not reset by power-on and may come on in either state. The flip-flop status is readout in bit 6 of the status word.

4. C 026 Calibrate Command (CAL)

Two sources of experiment-internal electrical stimulus (CAL A and CAL B) are controlled by two flip-flops connected as a conventional ripple counter. Each flip-flop is connected to a gate which allows the 2048 PPR (SP11) pulses to be applied (after appropriate shaping and amplitude modification) to selected preamp inputs. This creates a known pattern of coincidence conditions in the rate data and provides PHA of prescribed pulse amplitudes. The CAL flip-flops (A and B) are both reset to the "0" state by power on. C 026 is applied to the toggle input of flip-flop A, so each successive command toggles A from OFF to ON (0 → 1) or ON to OFF (1 → 0). Each 1 → 0 of CAL A toggles CAL B, hence four successive applications of C 026 are required to cycle through the four a 1 →0 transition of the CAL A flip-flop, so that CAL commands C 026 (usually 4 successive commands) ill normally be used in addition to C 005 and C 372 when commanding the X-ray system.

B. Analog and Digital Housekeeping Data

The digital housekeeping word is reserved for readout of the experiment command system status. Each of the various commandable functions is controlled by a separate binary flip-flop which is toggled (not set or reset) by ground command. If the first bit readout in time (MSB) is designated Bit 1, the status bits represent the following information:

BIT	FUNCTION AND COMMAND
1	Not Used
2	X-ray DATA (see C372)
3	Internal Calibrator A ON (C026)
4	Internal Calibrator B ON (C026)
5	X-ray Hi Voltage ON (C047)
6	Sector Synchronizer (SS) ON (C330)
7	Force Black-out MODE (FBOM) Off (C351)
8	X-ray Sector Synchronizer Data Mode (XRSDM) ON (C-005/372)

In all cases, the functions listed above correspond to a logical 1 in the NRZ data (i.e., 0 volts at the interface connector). All are true logic except Bit 7.

The fourteen analog voltages ASE7-01 through ASE7-14 are used to measure temperatures at various locations within E-7, and most of the output voltages from the low-voltage converter.

Temperature measurements are made with a thermistor-resistor voltage divider network powered from the E7 and 7.75 volt secondary voltage. The thermistors are mounted on metal tabs with epoxybonding

TABLE 1

E7 ANALOG TEMPERATURE MONITORS

NAME	FMI-ID	TEMPERATURE MEASURED
ASE7-01	D-42	HET(E7A)
ASE7-02	D-43	VLET2 (E7B2)
ASE7-03	D-44	Detector Mounting Plate
ASE7-04	D-45	X-ray Detector (E7D)
ASE7-05	D-46	VLET-1 (E7B1) Funnel
ASE7-06	D-47	LET (E7C) Funnel
ASE7-07	D-48	Electronics (Internal to box)
ASE7-08	D-49	Base-Plate (Rear)
ASE7-14	D-55	Base-Plate (Front)

entered into the appropriate counter(s). Section 2 includes a list of all rate coincidence conditions, and figure (Rate Data Format) shows how this data appears in telemetry.

The rate counting system includes 52 MOS LSI counters (24 bit with 12 bit log compressed readout). All unsectored counters are simultaneously converted to log form and stored for readout immediately following the occurrence of Rate Line 16 in the rate data. The sectored counters (when S.S. is on) may be converted to log and stored at any time during Rate Lines 1-7 upon completion of the spin synchronized accumulation interval, but not during Lines 8-16. This prevents transfer in the middle of the Sectored Rate readout sequence. When S.S. is off, the sectored rate counters are transferred simultaneously with the unsectored rate counters.

Each of the 52 rate counters (except R1 and R20) are Time shared (i.e. commutated) among several different rates. The number of commutator positions is always binary (i.e. 2, 4, or 8), and the position ID is included in bits 41, 42, and 43 of the 48 bit rate block. The ID readout indicates the position of the commutator at the time data was acquired (i.e. during the previous accumulation interval), not the present position. After completion of the rate readout sequence (Line 16) the commutates position and all rate counter data is transferred to readout storage and the commutators advanced to the next position.

PHA Data represents the exact amplitude of the pulses (to one channel in 1024) from three selected detectors in the HET (E7A) or from LET (E7C) for a single cosmic ray event. Additional tag bits further identify the

entered into the appropriate counter(s). Section 2 includes a list of all rate coincidence conditions, and figure (Rate Data Format) shows how this data appears in telemetry.

The rate counting system includes 52 MOS LSI counters (24 bit with 12 bit log compressed readout). All unsectored counters are simultaneously converted to log form and stored for readout immediately following the occurrence of Rate Line 16 in the rate data. The sectored counters (when S.S. is on) may be converted to log and stored at any time during Rate Lines 1-7 upon completion of the spin synchronized accumulation interval, but not during Lines 8-16. This prevents transfer in the middle of the Sectored Rate readout sequence. When S.S. is off, the sectored rate counters are transferred simultaneously with the unsectored rate counters.

Each of the 52 rate counters (except R1 and R20) are Time shared (i.e. commutated) among several different rates. The number of commutator positions is always binary (i.e. 2, 4, or 8), and the position ID is included in bits 41, 42, and 43 of the 48 bit rate block. The ID readout indicates the position of the commutator at the time data was acquired (i.e. during the previous accumulation interval), not the present position. After completion of the rate readout sequence (Line 16) the commutates position and all rate counter data is transferred to readout storage and the commutators advanced to the next position.

PHA Data represents the exact amplitude of the pulses (to one channel in 1024) from three selected detectors in the HET (E7A) or from LET (E7C) for a single cosmic ray event. Additional tag bits further identify the

particle as to coincidence condition, range, direction of arrival (from sector information), and other parameters of interest. Each PHA event represents the first cosmic ray particle of that type to enter the telescope since completion of the last PHA readout of that Telescope. If no particle event occurs, that readout contains zeros. HET and LET PHA blocks always alternate with one another in the data.

IV. Internal Calibration

E-7 contains two sources of internal electrical stimulation which are controlled by ground command (CAL A and CAL B, command C 026). There is no automatic cycling associated with these. Each calibrator, when energized (see description of command C 026), applies test pulses of known amplitude via a 1.0 picofarad capacitor to the input of the charge sensitive preamplifiers. The pulses are generated by SP11 (2048 PPR) from the S/C, and hence are coincident in time. A known data pattern is stimulated for each conbination of CAL A and CAL B on or off, and Pulse Height Analysis in known channels is initiated. The rates stinulated and PHA amplitudes for each experiment P, F1, and F2 are slightly different, and are shown in the attached tables. Additional counts from background radioactivity and noise may be added to the stimulus rate of ~ 2048 pulses per second.

TABLE 3

Stimulus Pattern for E7P

Status Word	X4X	X2X	X6X
	or	or	or
(octal)	X5X	X3X	X7X
CAL Status	A on	A off	A on
	B off	B on	B on
Rates Simulated:	R1	R10 a thru g	R1
	R4	R11 a,b	R2 b
	R5b	R12 a,b	R4 b
	R8a	R13 a	R5 a,b
	R14 d,e,f	R14 a,b,c,g	R8 b
	R17 b,f	R15 a,b,c	R10 a thru g
	SR1 b	R17 a,e	R14 a thru g
	SR2 e,f,g,h	R18 a,b,c	R16 a,b
	SR3 e,f,g,h	SR1 c,d	R17 a,b,e,f
		SR2 a,b,c	R19 a,b
		SR3 a,b,c	SR1 b
PHA HET A/B/C:	45/55/43	--------	45/56/61
LET A/B/C:	--------	22/32/18	-------

TABLE 4

Stimulus Pattern for E7F1

Status Word (octal)	X4X or X5X	X2X or X3X	X6X or X7X
CAL Status	A on B off	A off B on	A on B on
Rates Simulated:	R10 a thru g R11 a,b R12 a,b R13 a R14 a,b,c,g R15 a,b,c R17 a,c R18 a,b,c SR1 c,d SR2 a,b,c SR3 a,b,c	R1 R4 b R5 b R8 a R14 d,e,f R17 b,f SR1 b SR2 e,f,g,h SR3 e,f,g,h	R1 R4 b R5 b R8 b R10 a thru g R14 a thru g R16 a,b R17 a,b,e,f R19 a,b ~~SR1 b~~
PHA HET A/B/C:	---------	9/22/29	15/22/29
LET A/B/C:	20/30/25	-------	--------

TABLE 5

Stimulus Pattern for E7F2

Status Word (octal)	X4X or X5X	X2X or X3X	X6X or X7X
CAL Status	A on B off	A off B on	A on B on
Rates Simulated:	R10 a thru f R11 a,b R12 a,b R13 a R14 a,b,c,g R15 a R17 a,e R18 a SR1 c,d SR2 a,b,c,d SR3 a,b,c,d	R1 R4 b R5 b R8 a R14 d,e,f R17 b,f SR1 b SR2 e,f,g,h SR3 e,f,g,h	R1 R4 b R5 b R8 b R10 a thru f R14 a thru g R16 a R17 a,b,e,f R19 a SR1 b
PHA HET A/B/C:	-----------	15/19/25	15/19/35
LET A/B/C:	45/39/19	--------	---------

0358

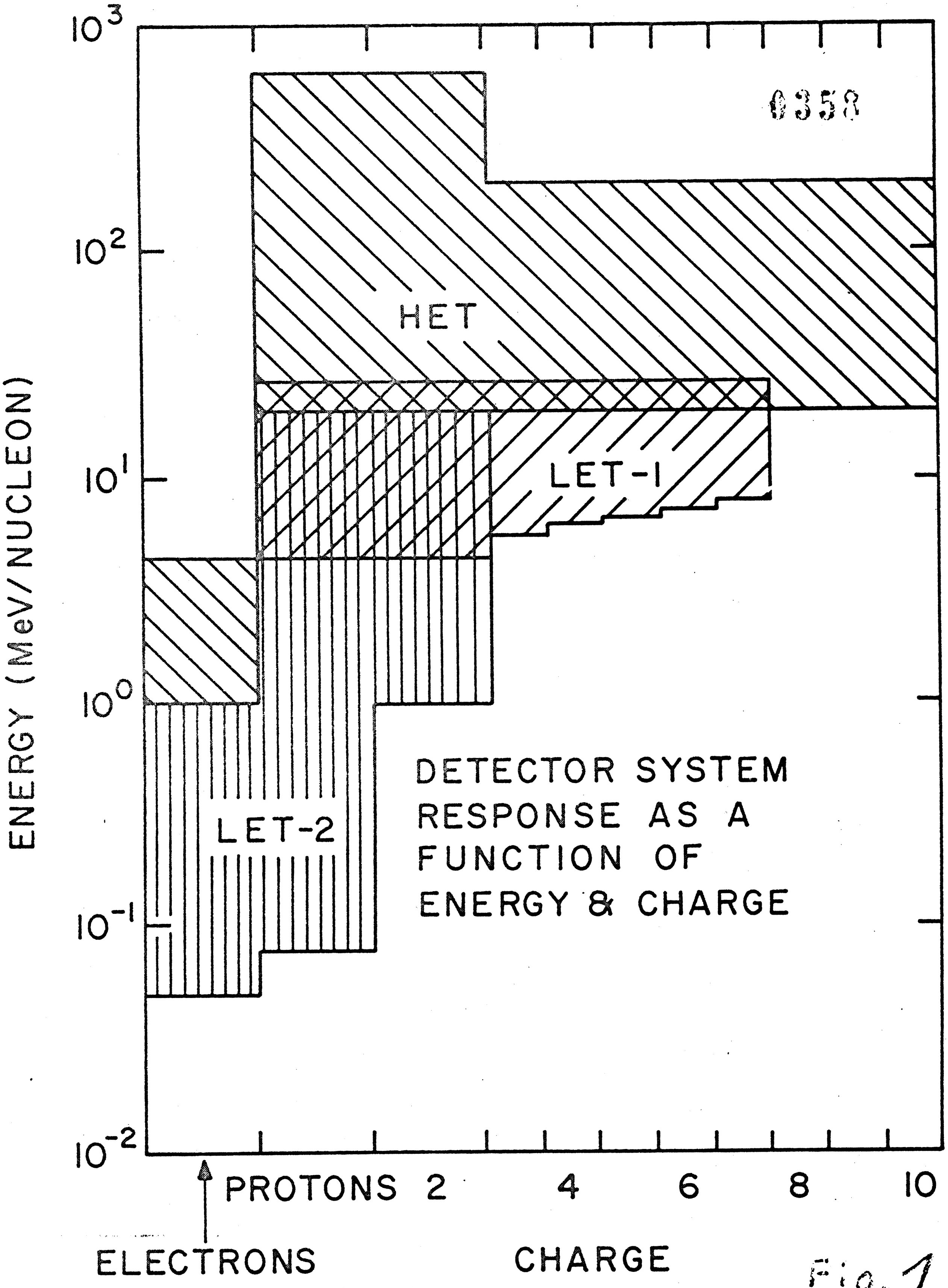

10^3
10^2
10^1
10^0
10^-1
10^-2
ENERGY (MeV/NUCLEON)
HET
LET-1
LET-2
DETECTOR SYSTEM RESPONSE AS A FUNCTION OF ENERGY & CHARGE
PROTONS 2
4
6
8
10
ELECTRONS
CHARGE

Fig. 1

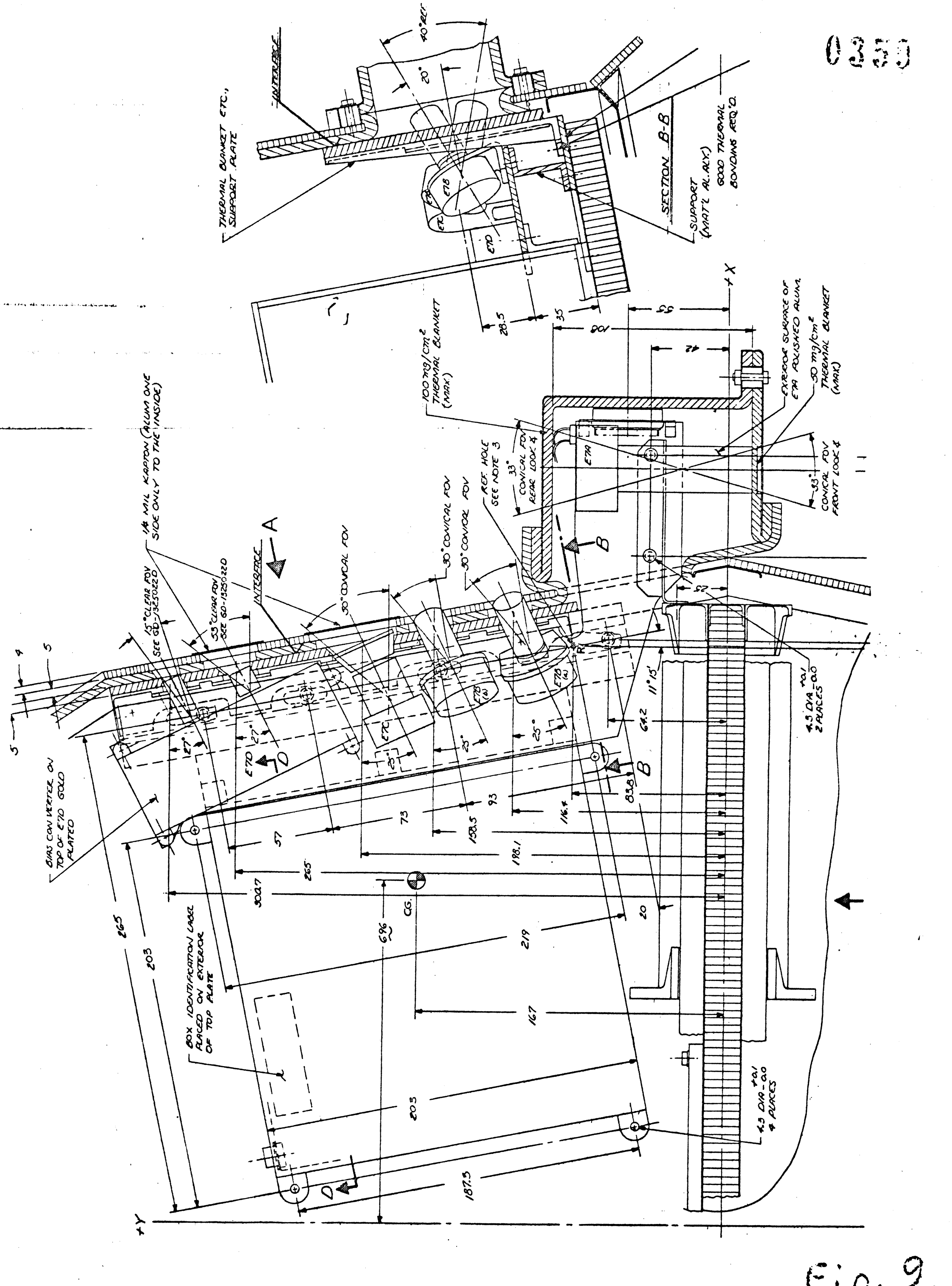
THERMAL BLANKET ETC., SUPPORT PLATE
INTERFACE
40° REF
20°
E7B
E7C
E7D
SECTION B-B
SUPPORT (MAT'L AL.ALY.)
GOOD THERMAL BONDING REQ'D
28.5
35
108
55
42
100 mg/cm² THERMAL BLANKET (MAX)
E7A
EXTERIOR SURFACE OF E7A POLISHED ALUM.
30 mg/cm² THERMAL BLANKET (MAX)
33° CONICAL FOV REAR LOOK 4
33° CONICAL FOV FRONT LOOK 4
REF. HOLE SEE NOTE 3
30° CONICAL FOV
30° CONICAL FOV
30° CONICAL FOV
1/4 MIL KAPTON (ALUM ONE SIDE ONLY TO THE INSIDE)
15° CLEAR FOV SEE GD-1325022D
55° CLEAR FOV SEE GD-1325022D
INTERFACE
A
B
B
D
D
4
5
5
27°
27°
25°
25°
25°
11°15'
52
64.2
4.5 DIA +0.1 -0.0 2 PLACES
BIAS CON VERTER ON TOP OF E7D GOLD PLATED
265
203
57
73
93
158.5
116.4
83.8
198.1
265
302.7
20
219
69.6
C.G.
167
BOX IDENTIFICATION LABEL PLACED ON EXTERIOR OF TOP PLATE
203
187.5
4.5 DIA +0.1 -0.0 4 PLACES
+X
+Y

Fig. 2

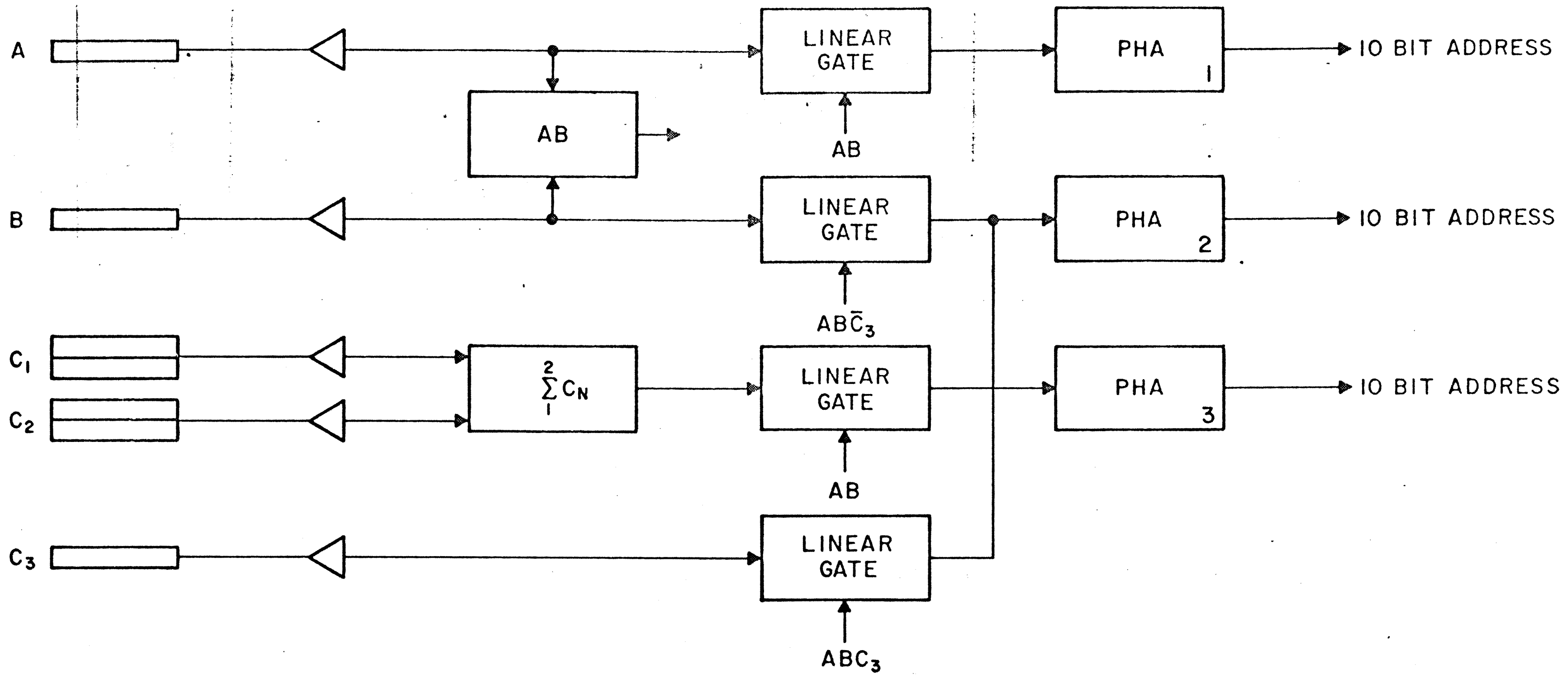

PRIORITY MODES

$AB\bar{C}_3$

$AB\bar{C}_3$ (A > 2 x MIN.)

ABC_3 (A AND C > 2x MIN.)

ABC_3

RATES

A (2 LEVELS)

B, C_1, C_2, C_3

$$\left.\begin{array}{l} AB\bar{C}_1\bar{C}_2\bar{C}_3 \\ ABC_1\bar{C}_2\bar{C}_3 \\ ABC_1C_2\bar{C}_3 \\ ABC_1C_2C_3 \end{array}\right\} \text{(2 LEVELS ON A)}$$

2 BITS REQUIRED TO IDENTIFY PRIORITY MODE.

1 BIT REQUIRED TO IDENTIFY PHA DATA AS H.E.T.

1 BIT REQUIRED TO DETERMINE IF PHA 2 ADDRESS IS B OR C_3

3 BITS REQUIRED TO IDENTIFY SECTOR.

1 BIT REQUIRED FOR RANGE.

E7A SIMPLIFIED HIGH ENERGY DETECTOR

Fig. 3

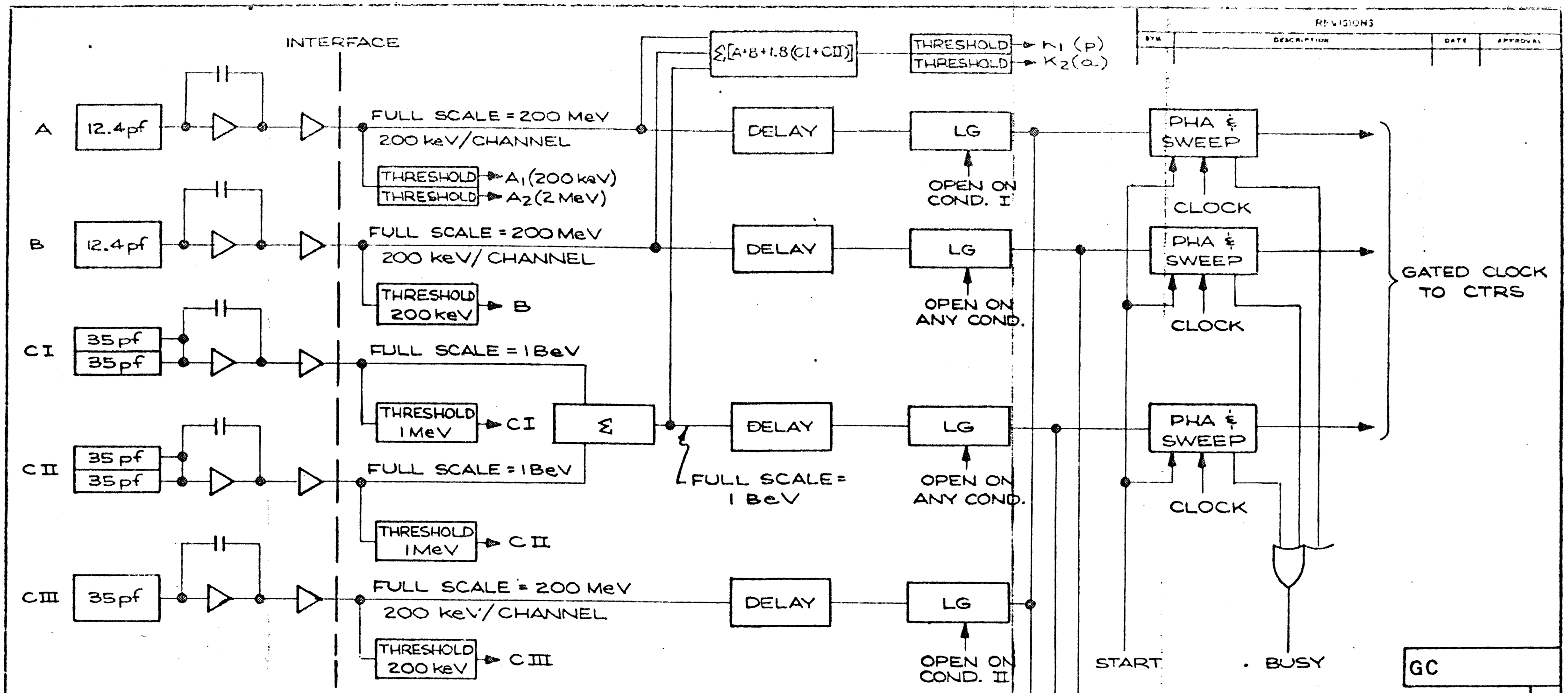

PULSE HEIGHT ANALYSIS CONDITIONS:

TYPE I - $[(A_2K_1 \text{ OR } A_1C\mathrm{I})B\overline{C\mathrm{III}}]$ OR $(K_2A_1B\overline{C\mathrm{III}}) \rightarrow$ ANALYZE A, B, & $(C\mathrm{I}+C\mathrm{II})$ } ONLY WHEN $\left(\frac{\overline{\text{BUSY}}}{\text{START}}\right)$

TYPE II - $A_1\overline{A_2}BC\mathrm{III}$ OR $(A_2BC\mathrm{III}) \rightarrow$ ANALYZE B, $(C\mathrm{I}+C\mathrm{II})$, & C III

RATES:

INPUT NO.	LEVEL OF COMMUTATION	RATES
R1	1	$(A_2K_1+A_1C\mathrm{I})B\overline{C\mathrm{III}}$
R2 a,b	2	$A_1\overline{A_2}BC\mathrm{III}$, $A_1BK_2\overline{C\mathrm{III}}$
R3 a,b	2	$A_2BC\mathrm{III}$, $A_2BK_2\overline{C\mathrm{I}}$ $E_p \geq 50$ MeV, $20 \leq E_\alpha \leq 30$ MeV/NUC.
R4 a,b	2	$A_2BK_2C\mathrm{I}\,\overline{C\mathrm{II}}$, A_1 $30 \leq E_\alpha \leq 40$ MeV/NUC.
R5 a,b	2	$A_2BK_2C\mathrm{I}\,C\mathrm{II}\,\overline{C\mathrm{III}}$, A_2 $40 \leq E_\alpha \leq 50$ MeV/NUC.
R6 a,b	2	$A_1\overline{A_2}B\overline{C\mathrm{I}}$, $A_1\overline{A_2}BC\mathrm{I}\,\overline{C\mathrm{II}}$ $2 \leq E_e \leq 4$ MeV, $4 \leq E_e \leq 6$ MeV
R7 a,b	2	$A_1\overline{A_2}BC\mathrm{I}\,C\mathrm{II}\,\overline{C\mathrm{III}}$, $A_2BK_1\overline{C\mathrm{I}}$ $6 \leq E_e \leq 8$ MeV, $20 \leq E_p \leq 30$ MeV
R8 a,b	2	$A_2BK_1C\mathrm{I}\,\overline{C\mathrm{II}}$, $A_2BK_1C\mathrm{I}\,C\mathrm{II}\,\overline{C\mathrm{III}}$ $30 \leq E_p \leq 40$ MeV, $40 \leq E_p \leq 50$ MeV
R14	8	B, CI, CII, CIII. THESE RATE OUTPUTS COMMUTATED WITH RATES FROM LET.
SR1	4	$A_1\overline{A_2}BC\mathrm{I}\,\overline{C\mathrm{III}}$, $A_2BK_1\overline{C\mathrm{III}}$. THIS RATE ALSO COMMUTATED WITH TWO RATES FROM LET.

0361

Fig. 4 E7A

REVISIONS

LIST OF MATERIAL

DRAWN R. DOLEN 5-13-71

BLOCK DIAGRAM HET
HELIOS A/B COSMIC RAY EXPERIMENT

NATIONAL AERONAUTICS AND SPACE ADMINISTRATION
GODDARD SPACE FLIGHT CENTER
GREENBELT, MARYLAND

GC 1324977

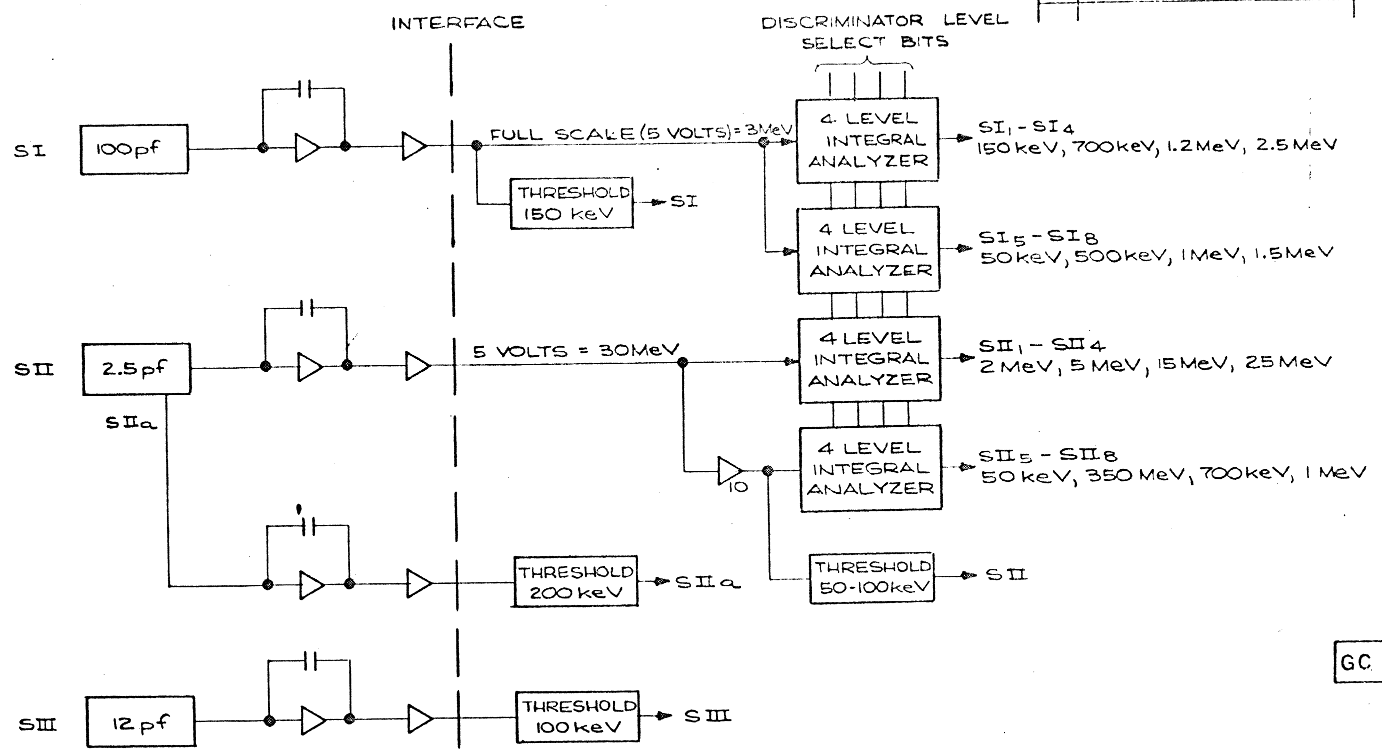

RATES:

INPUT NO.	LEVEL OF COMMUTATION		
R15	4	$SI_i\ \overline{SII}\ \overline{SII_a}\ \overline{SIII}$	$i = 1,4$ $p^+ \geq 150$ keV, 700 keV, 1.2 MeV, 2.5 MeV
R16	4	$SI\ SII_i\ \overline{SII_a}\ \overline{SIII}$	$i = 1,4$ $p^+ \geq 2$ MeV, 5 MeV, 15 MeV, 25 MeV
R17	8	$SI\ SII\ SIII\ SII_a$	4 CORRESPONDING RATES FROM OTHER VLET COMMUTATED WITH THESE.

SECTORED RATES:

INPUT NO.	LEVEL OF COMMUTATION		
SR 2a	8	$SI_i\ \overline{SII}\ \overline{SII_a}\ \overline{SIII}$	$i = 5,8$ $p^+ > 50$ keV & e^- FROM 50-150 keV, $p^+ > 500$ keV, 1 MeV, 1-5 MeV
SR 2b	8	$\overline{SI}\ SII_i\ \overline{SII_a}\ \overline{SIII}$	$i = 5,8$ $e^- \geq 150$ keV, 350 keV, 700 keV, 1 MeV

Fig. 5 E7B

GC

0962

REVISIONS

LIST OF MATERIAL

STEVENS

R DOLEN 5-13-71

BLOCK DIAGRAM VLET
HELIOS A/B COSMIC RAY EXPERIMENT

NATIONAL AERONAUTICS AND SPACE ADMINISTRATION
GODDARD SPACE FLIGHT CENTER
GREENBELT MARYLAND

GC 1324978

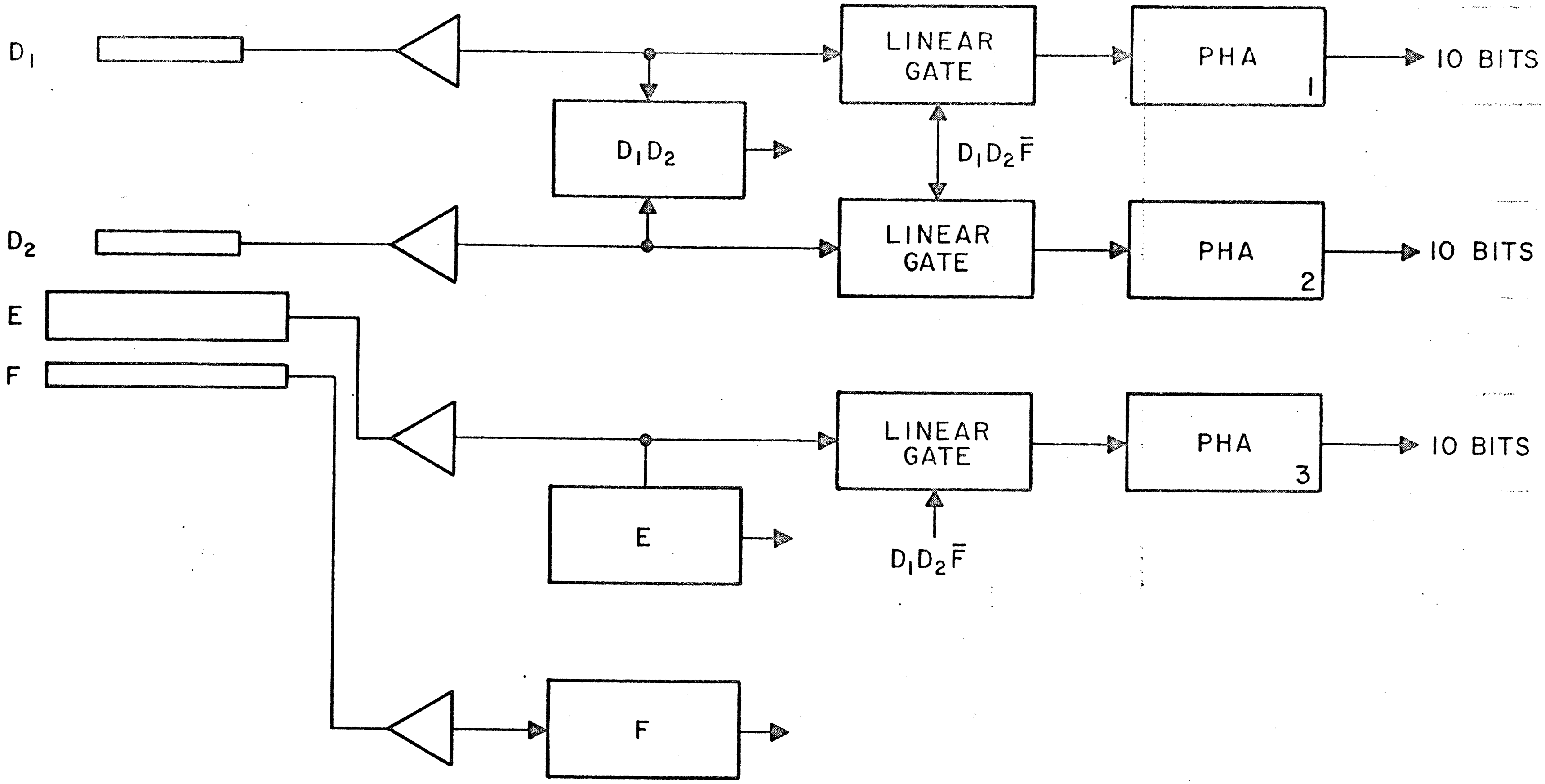

RATES
$D_1D_2(D_1+D_2)E\bar{F}$ (2 LEVELS ON E)
$D_1D_2E\bar{F}$ (2 LEVELS ON E)
D_1 (8 LEVELS)
$\bar{D}_1\bar{D}_2E\bar{F}$

2 BITS REQUIRED TO IDENTIFY PRIORITY MODE.
1 BIT REQUIRED TO IDENTIFY PHA DATA AS LET-I.
3 BITS REQUIRED TO IDENTIFY SECTOR.

Fig. 6 E7C SIMPLIFIED LET DETECTOR

REVISIONS			
SYM	DESCRIPTION	DATE	APPROVAL

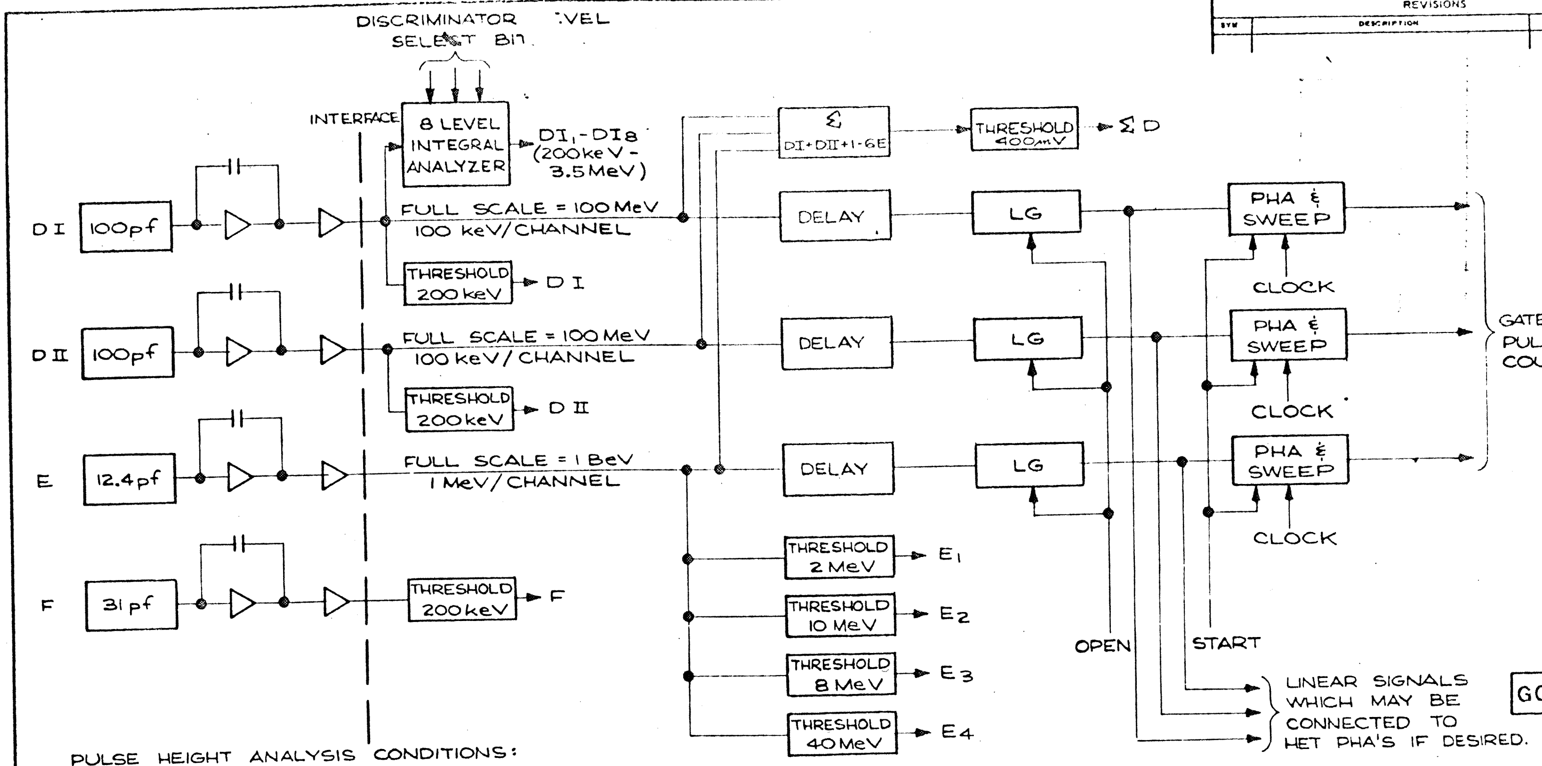

PULSE HEIGHT ANALYSIS CONDITIONS:

$$\left.\begin{array}{l} \text{I}: DI \cdot DII \cdot \overline{F} \\ \text{II}: DI \cdot DII \cdot \Sigma D \cdot \overline{F} \end{array}\right\} \text{ONLY WHEN } \overline{\text{BUSY}} \cdot \text{START}$$

RATES:

INPUT NO.	LEVEL OF COMMUTATION	RATES
R10a,b	8	$DI_1, DI_2, \ldots, DI_8$ 200 keV ≤ E ≤ 3 MeV/NUC.
R11a,b	2	$DI\ DII\ \overline{F}, DI\ DII\ \Sigma D\ \overline{F}$ 3MeV ≤ E_p ≤ 20MeV, 3 MeV ≤ E_α ≤ 20 MeV/NUC.
R12a,b	2	$DI\ DII\ E_1\ \overline{F}, DI\ DII\ \Sigma D E_3\ \overline{F}$ 6 MeV ≤ E_p ≤ 20MeV, 6 MeV/NUC. ≤ E_α ≤ 20MeV/NUC.
R13a,b	2	$DI\ DII\ E_2\ \overline{F}, DI\ DII\ \Sigma D E_4\ \overline{F}$ 12MeV ≤ E_p ≤ 20MeV, 12 MeV/NUC. ≤ E_α ≤ 20MeV/NUC.
R14a,b	8	DI, DII, E, F 4 ADDITIONAL RATES FROM HET ARE COMMUTATED WITH THESE.
SR1	4	$DI, DII\ \overline{F}, DI\ DII\ E_1\ \overline{F}$ SAME AS R11a AND R12a ABOVE. THESE TWO RATES ALSO COMMUTATED WITH TWO RATES FROM HET.

LET-I INTEGRAL ANALYZER LEVELS

DI_1	.2 MeV
DI_2	.3 MeV
DI_3	.43 MeV
DI_4	.64 MeV
DI_5	.94 MeV
DI_6	1.4 MeV
DI_7	2.0 MeV
DI_8	3.0 MeV

0364

GC

Fig. 7 E7C

REQD	PART NO	DESCRIPTION	MATL	MATL SPEC	UNIT WT

LIST OF MATERIAL

UNLESS OTHERWISE SPECIFIED
DIMENSIONS ARE IN INCHES
TOLERANCES ON
FRACTIONS ± .. DECIMALS ± .. ANGLES ± ..

NAME	INIT	DATE
DESIGNER D. STILWELL		
DRAWN R. DOLEN		5-13-71
CHECKED		
APPROVED		
APPROVED		

BLOCK DIAGRAM
LET
HELIOS A/B
COSMIC RAY
EXPERIMENT

NATIONAL AERONAUTICS AND
SPACE ADMINISTRATION
GODDARD SPACE FLIGHT CENTER
GREENBELT, MARYLAND

GC 1324976

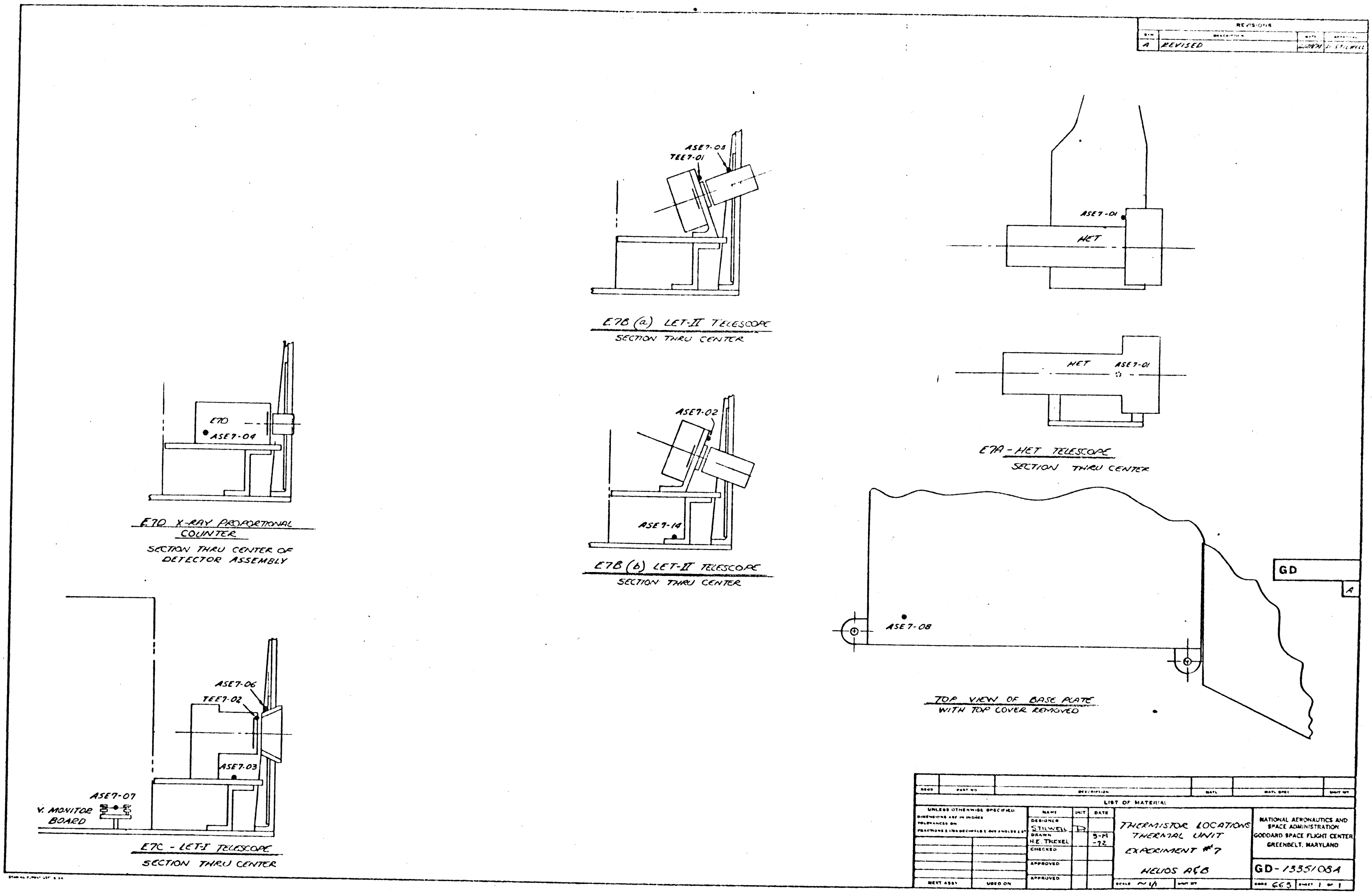
REVISIONS
A
REVISED
D. STILWELL
ASE7-05
TEE7-01
E7B (a) LET-II TELESCOPE
SECTION THRU CENTER
ASE7-01
HET
HET
ASE7-01
E7A-HET TELESCOPE
SECTION THRU CENTER
E7D
ASE7-04
E7D X-RAY PROPORTIONAL COUNTER
SECTION THRU CENTER OF DETECTOR ASSEMBLY
ASE7-02
ASE7-14
E7B (b) LET-II TELESCOPE
SECTION THRU CENTER
GD
A
ASE7-08
TOP VIEW OF BASE PLATE WITH TOP COVER REMOVED
ASE7-06
TEE7-02
ASE7-03
ASE7-07
V. MONITOR BOARD
E7C - LET-I TELESCOPE
SECTION THRU CENTER
LIST OF MATERIAL
UNLESS OTHERWISE SPECIFIED
DESIGNER
STILWELL
DRAWN
H.E. TREXEL
5-M-72
CHECKED
APPROVED
APPROVED
NEXT ASSY
USED ON
THERMISTOR LOCATIONS THERMAL UNIT
EXPERIMENT #7
HELIOS A&B
SCALE ~1/1
NATIONAL AERONAUTICS AND SPACE ADMINISTRATION
GODDARD SPACE FLIGHT CENTER
GREENBELT, MARYLAND
GD-1335108A
665
SHEET 1 OF 1

Fig. 8

MODE TABLE

The experiment cycle times and other parameters of interest as
related to S/C bit rate and format is shown on page 36. Since the
C internal calibrators (CAL A and CAL B) are pulsed at the fine sector rate,
the expected number of counts per sectored rate readout can be
variable by 8 times number of rolls in the accumulation interval.

Explanation Mode Table

Col. 4. 1 PHA block or 1 PHA EDF = 48 bits
1 Rate Data Block or Line= 48 bits

Col. 5. 1 Cycle ≙ 8 Rate - Data EDF ≙ 128 Rate Blocks, with interspersed PHA blocks, e.g. for 4096 Bps - (5+1)x128 = 768 blocks. (Rate and PHA data)

Col.10. Cycle time = $\dfrac{\text{Frames per Cycle x 1152}}{\text{BM}}$

Col.11. Chosen accumulation interval for SR counters in rolls

Col.12. Counts per Readout = $\dfrac{\text{Accumulation interval x 2048}}{8}$,
C since the interval calibrators are pulsing at the fine sector rate. One SR counter is only counting during 1/8 of a roll or during one 45° sector.

1 EDMF ≙ 1 Cycle ≙ 1 Experiment Data Main Frame

PROJECT HELIOS

EXP. 7

MODE TABLE

I 2.1
p 2

1	2	3	4	5	6	7	8	9	10		11	12
BM	FM	DM	PHA Blocks / RATE BLOCKS	BLOCKS P.CYCLE	WORDS P.CYCLE	WORDS P.FRAME	FRAMES P.CYCLE	MAIN ^{xx} FRAMES P.CYCLE	CYCLE SEC.	TIME MIN.	ROLLS SR COUNTERS	COUNTS PER SR READOUT
4096	5	-	5:1	768	4608	3	1536	22	432	7.2	53	13,568
2048	5	-	5:1	768	4608	3	1536	22	864	14.4	53	13,568
2048	1	-	5:1	768	4608	6	768	11	432	7.2	53	13,568
1024	1	-	3:1	512	3072	6	512	8	576	9.6	69	17,664
512	1	-	1:1	256	1536	6	256	4	576	9.6	69	17,664
512	2	-	3:1	512	3072	12	256	4	576	9.6	69	17,664
256	2	-	1:1	256	1536	12	128	2	576	9.6	69	17,664
128	2	-	1:1	256	1536	12	128	2	1152	19.2	138	35,328
64	2	-	1:1	256	1536	12	128	2	2304	38.4	276	70,656
64	3	-	1:1	256	1536	12	128	2	2304	38.4	276	70,656
32	3	-	1:1	256	1536	12	128	2	4608	76.8	552	141,312
16	3	-	1:1	256	1536	12	128	2	9216	153.6	1104	282,624
8	3	-	1:1	256	1536	12	128	2	18432	307.2	2208	565,248
8	3	B/O^{x}	0:1	128	768	12	64	1	9216	153.6	1104	282,624

For explanation see page I 2.1 p 1

^{x} Blackout

^{xx}Rounded

1 EDMF ≙ 1 Cycle

0367

0369

EXPERIMENT 7

SCIENCE DATA PROCESSING REQUIREMENTS

INVESTIGATOR : .... Dr. J.H.Trainor

APM EXPERIMENTS : .... Dr. Wodsak GfW

0370

1. EXPERIMENT DATA FRAME

The length of one DATA BLOCK is 48 bits (Nr.1-48) for
RATE DATA and
PULSE HIGH DATA (PHA-Data)

The length of one EDF for
RATE DATA is 8x16 = 128 Rate Blocks
The layout of 1x16 Rate Blocks
(= 1"SUPERBLOCK") is shown on TABLE 1.

The length of one EDF for
PULSE HIGH DATA is identical with
one Data Block (layout on TABLE 2)

The PHA-Data are interspersed automatically between the Rate Data Blocks in FM 1,2,3,5, in a defined ratio. (see TABLE 4).

ATTENTION: Before interpretation the EDF has to be inverted.
All following information is valid for the inverted EDF.

2. 1 x 16 RATE DATA BLOCKS LAYOUT ("SUPERBLOCK")

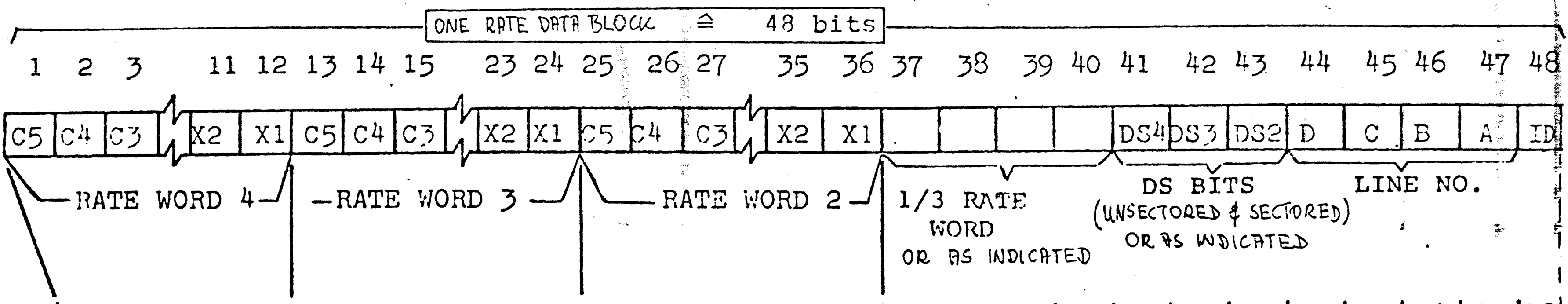

LINE NO.				37	38	39	40	41 42 43	44	45	46	47	48
1	S-XR (1)	S-XR (2)	S-XR (3)	X-RAY CMD-REG					0	0	0	0	1
2	S-XR (4)	S-XR (5)	S-XR (6)	X4	X3	X2	X1	UNSECTORED RATE SEQUENCE ID	1	0	0	0	1
3	S-XR (7)	S-XR (8)	R20 - USXR	R9 C1	X7	X6	X5		0	1	0	0	1
4	R16	R18	R19	C5	C4	C3	C2		1	1	0	0	1
5	R2	R3	R4	← SWB — X-RAY EXE-REG →					0	0	1	0	1
6	R5	R6	R7	X4	X3	X2	X1	UNSECTORED RATE SEQUENCE ID	1	0	1	0	1
7	R8	R10	R11	R1 C1	X7	X6	X5		0	1	1	0	1
8	R12	R13	R14	C5	C4	C3	C2		1	1	1	0	1
9	SR1-(1)	SR2-(1)	SR3-(1)	BLANKS				SECTORED RATE SEQUENCE ID	0	0	0	1	1
10	SR1-(2)	SR2-(2)	SR3-(2)	X4	X3	X2	X1		1	0	0	1	1
11	SR1-(3)	SR2-(3)	SR3-(3)	R14 C1	X7	X6	X5		0	1	0	1	1
12	SR1-(4)	SR2-(4)	SR3-(4)	C5	C4	C3	C2		1	1	0	1	1
13	SR1-(5)	SR2-(5)	SR3-(5)	BLANKS _					0	0	1	1	1
14	SR1-(6)	SR2-(6)	SR3-(6)	X4	X3	X2	X1		1	0	1	1	1
15	SR1-(7)	SR2-(7)	SR3-(7)	R17 C1	X7	X6	X5		0	1	1	1	1
16	SR1-(8)	SR2-(8)	SR3-(8)	C5	C4	C3	C2		1	1	1	1	1

2.1 LAYOUT OF ONE PULSE HIGH DATA BLOCK

0372

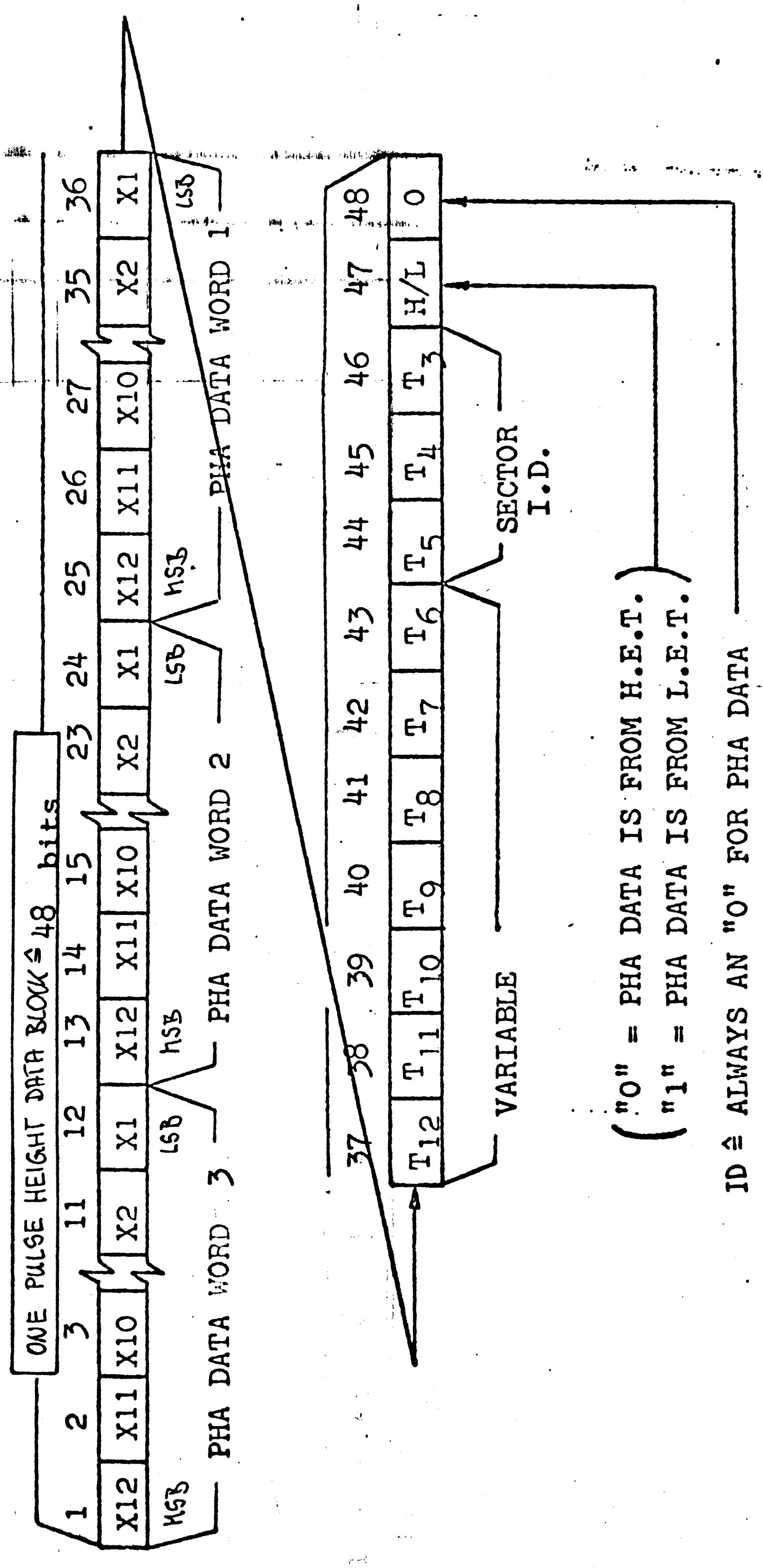

"0" = PHA DATA IS FROM H.E.T.
"1" = PHA DATA IS FROM L.E.T.

ID ≙ ALWAYS AN "0" FOR PHA DATA

	DS 2	DS 3	DS 4	Line-No.
R 1	+)			ⓐ
R 2 A	o			•
B	1			•
R 3 A	o			•
B	1			
R 4 A	0			
B	1			
R 5 A	0			
B	1			
R 6 A	0			
B	1			
R 7 A	0			
B	1			
R 8 A	0			
B	1			
R 9 A	0			
B	1			
R 10 A	0	0	o	
⋮	LSB	(see R14)	MSB	
H	1	1	1	
R 11 A	0			
B	1			
R 12 A	0			
B	1			
R 13 A	0			
B	1			
R 14 A	0	0	0	
B	1	0	0	
C	0	1	0	
D	1	1	0	
E	0	0	1	
F	1	0	1	
G	0	1	1	
H	1	1	1	
R 15 A	0	0		
B	1	0		
C	0	1		
D	1	1		
R 16 A	0	0		
B	1	0		
C	0	1		
D	1	1		
R 17 A	0	0	0	
B	1	0	0	
C	0	1	0	
D	1	1	0	
E	0	0	1	
F	1	0	1	
G	0	1	1	
H	1	1	1	
R 18 A	0	0		
B	1	0		
C	0	1		
D	1	1		
R 19 A	0	0		
B	1	0		
C	0	1		
D	1	1		
R 20	USXR			

	DS 2	DS 3	DS 4	Line-Nr.
SR 1 A	0	0	0	ⓑ
B	1	0	0	•
C	0	1	0	•
D	1	1	0	•
SR 2 A	0	0	0	
B	1	0	0	
C	0	1	0	
D	1	1	0	
E	0	0	1	
F	1	0	1	
G	0	1	1	
H	1	1	1	
SR 3 A	0	0	0	
B	1	0	0	
C	0	1	0	
D	1	1	0	
E	0	0	1	
F	1	0	1	
G	0	1	1	
H	1	1	1	

<u>TABLE 3:</u> Commutator Positions

+) BLANKS indicate:
NOT relevant bits,
can be "0" or "1".

ⓐ DS2-DS4 for <u>all</u> unsectored Rates R1 - R20 are located in lines 2, 3, 4, 6, 7 and 8.

Throughout one Superblock these lines contain the same bit pattern repeated 5 times.

At least 3 out of the 6 have to be identical.

ⓑ DS2-DS4 for <u>all</u> sectored Rates SR1-SR3 are located in lines 9 - 16 and also repeated 5 times in one superblock.

3 out of 6 have to be identical.

BIT RATE	FORMAT	DIM	RATIO PHA DATA BLOCKS : RATE DATA BLOCKS
4096	5	-	5:1
2048	1	-	5:1
1024	1	-	3:1
512	1	-	1:1
512	2	-	3:1
256	2	-	1:1
128	2	-	1:1
64	2/3	-	1:1
32	3	-	1:1
16	3	-	1:1
8	3	-	1:1
8	3	B/O	0:1

Table 4: TRANSMISSION-RATIO OF PHA DATA TO RATE DATA

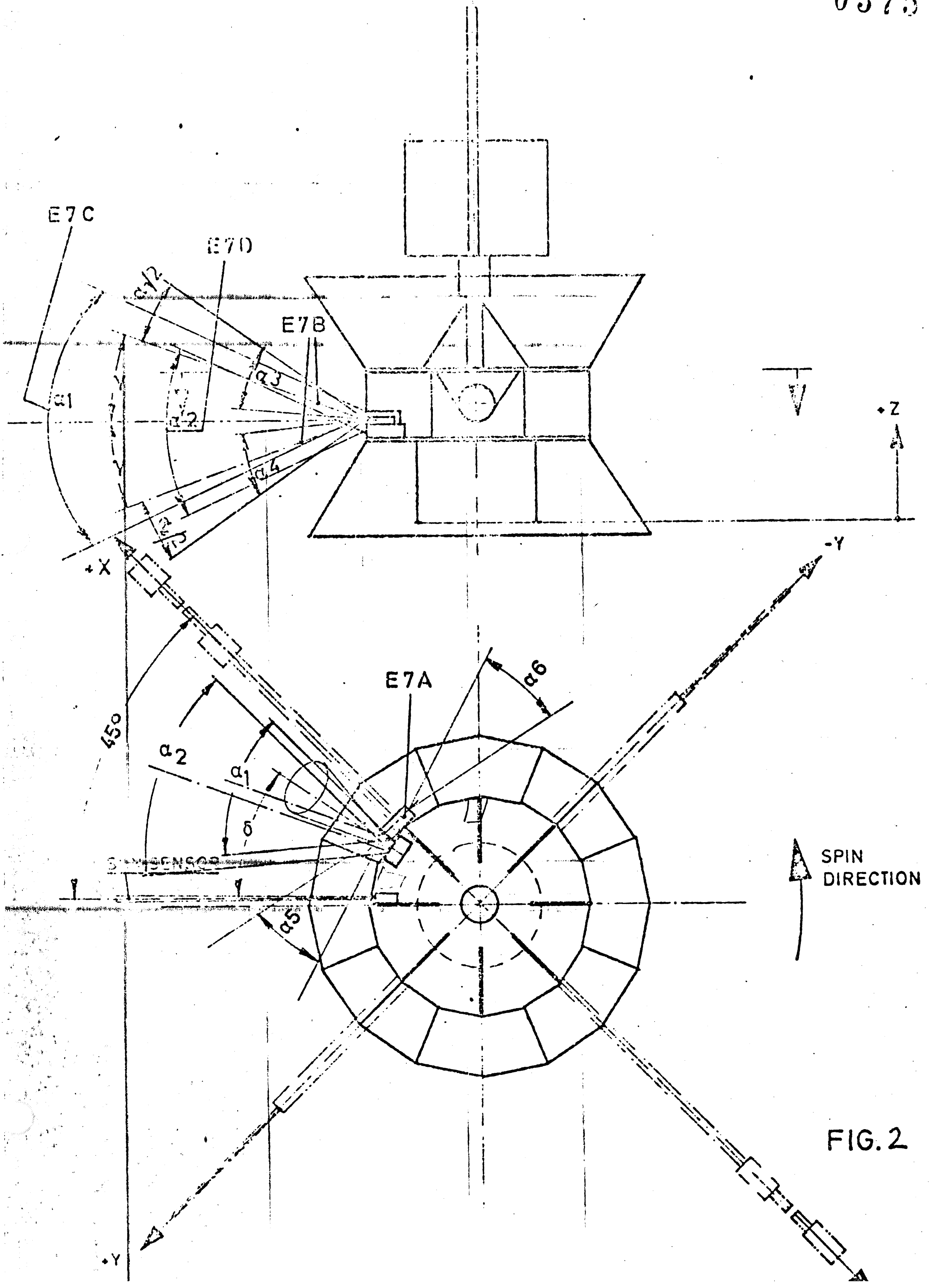
E7C
E7D
E7B
γ/2
α3
α4
α1
α2
γ/2
V
+Z
+X
-Y
E7A
α6
45°
α2
α1
δ
SUN SENSOR
α5
SPIN DIRECTION
+Y

FIG. 2

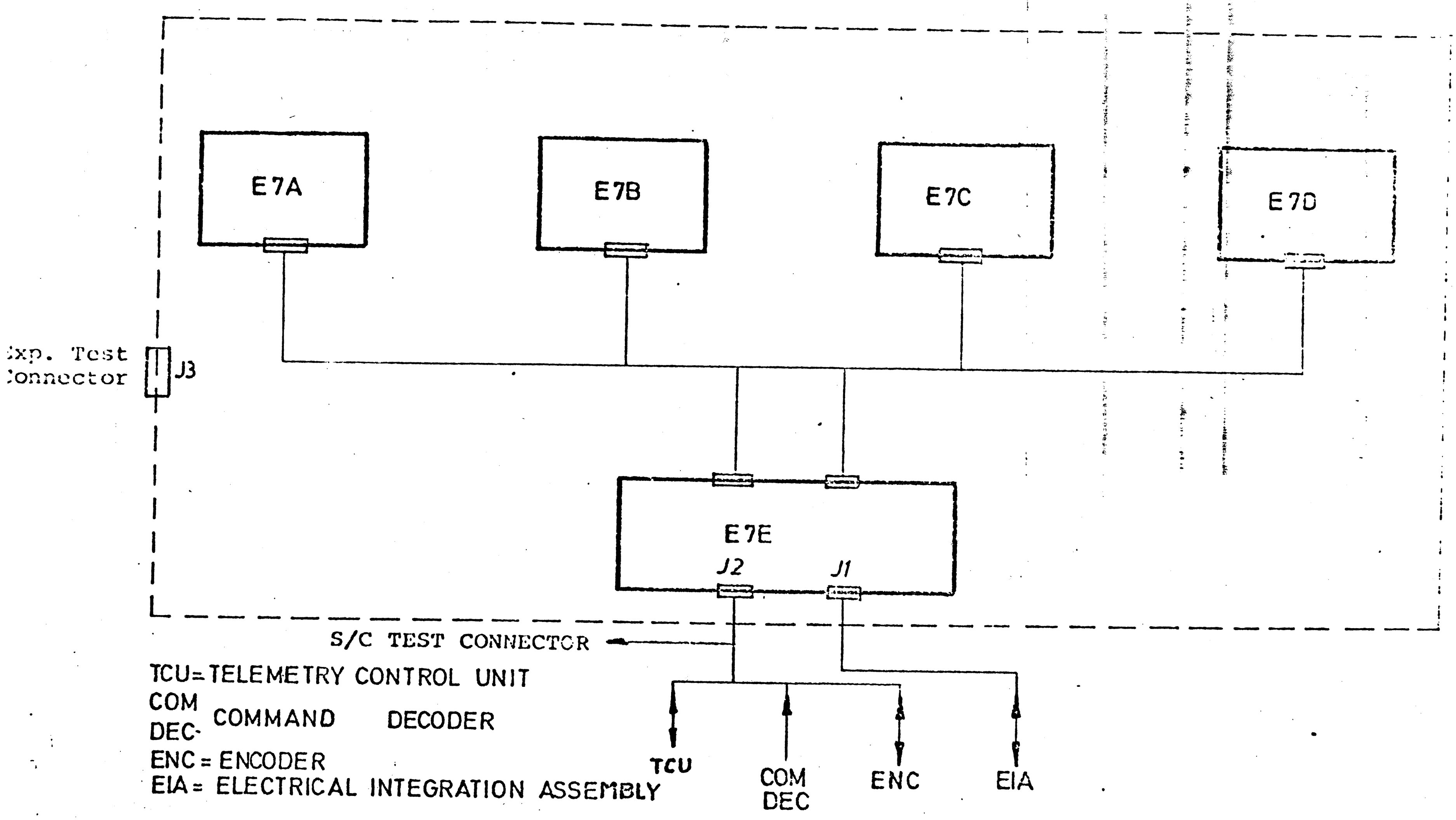

TCU= TELEMETRY CONTROL UNIT
COM
DEC- COMMAND DECODER
ENC = ENCODER
EIA = ELECTRICAL INTEGRATION ASSEMBLY

HELIOS

INTERFACE EXPERIMENT E7
INTERCONNECTIONS

PROJECT HELIOS

I 3.
p 3

E7

0377

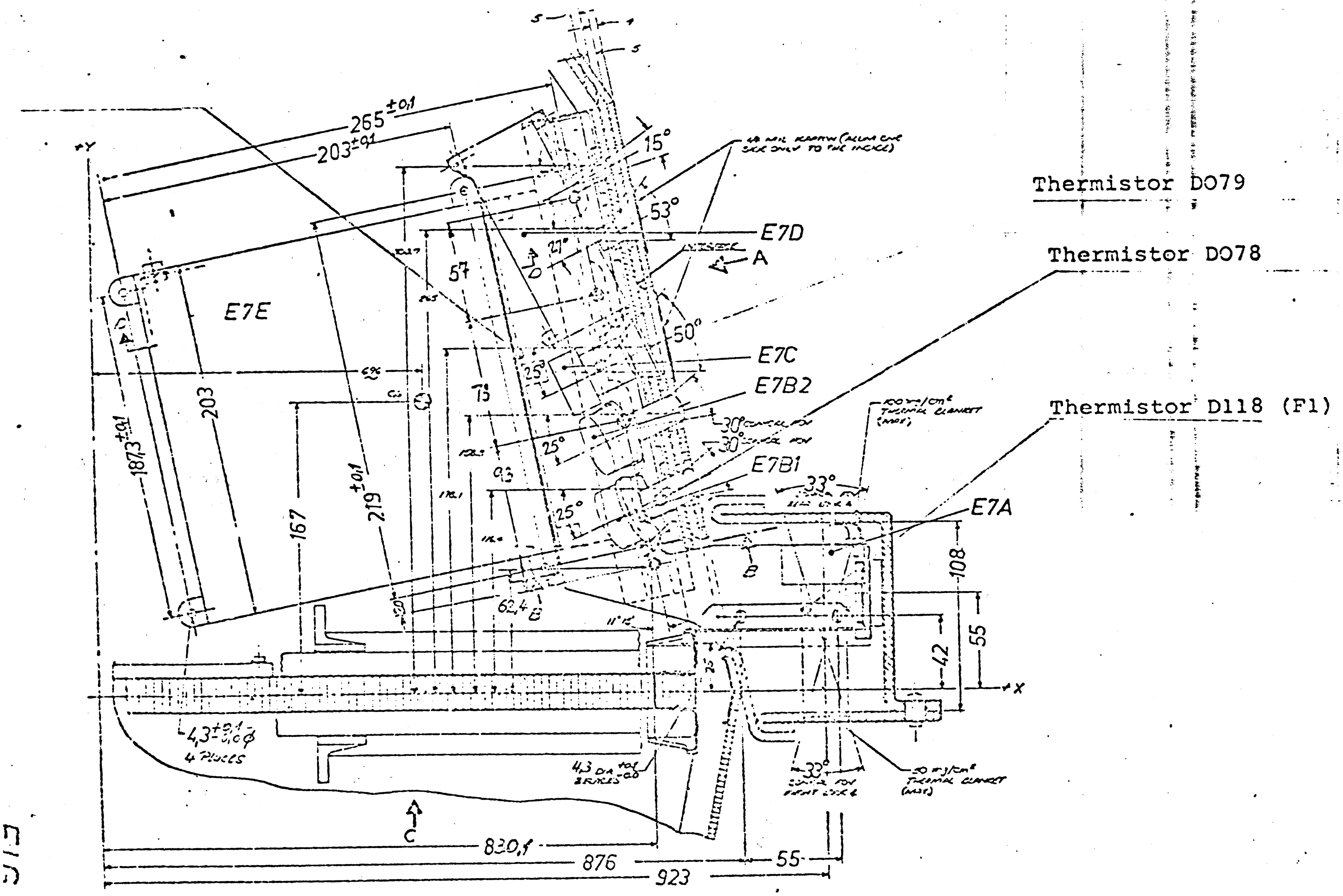

FIG 11

E7

0378

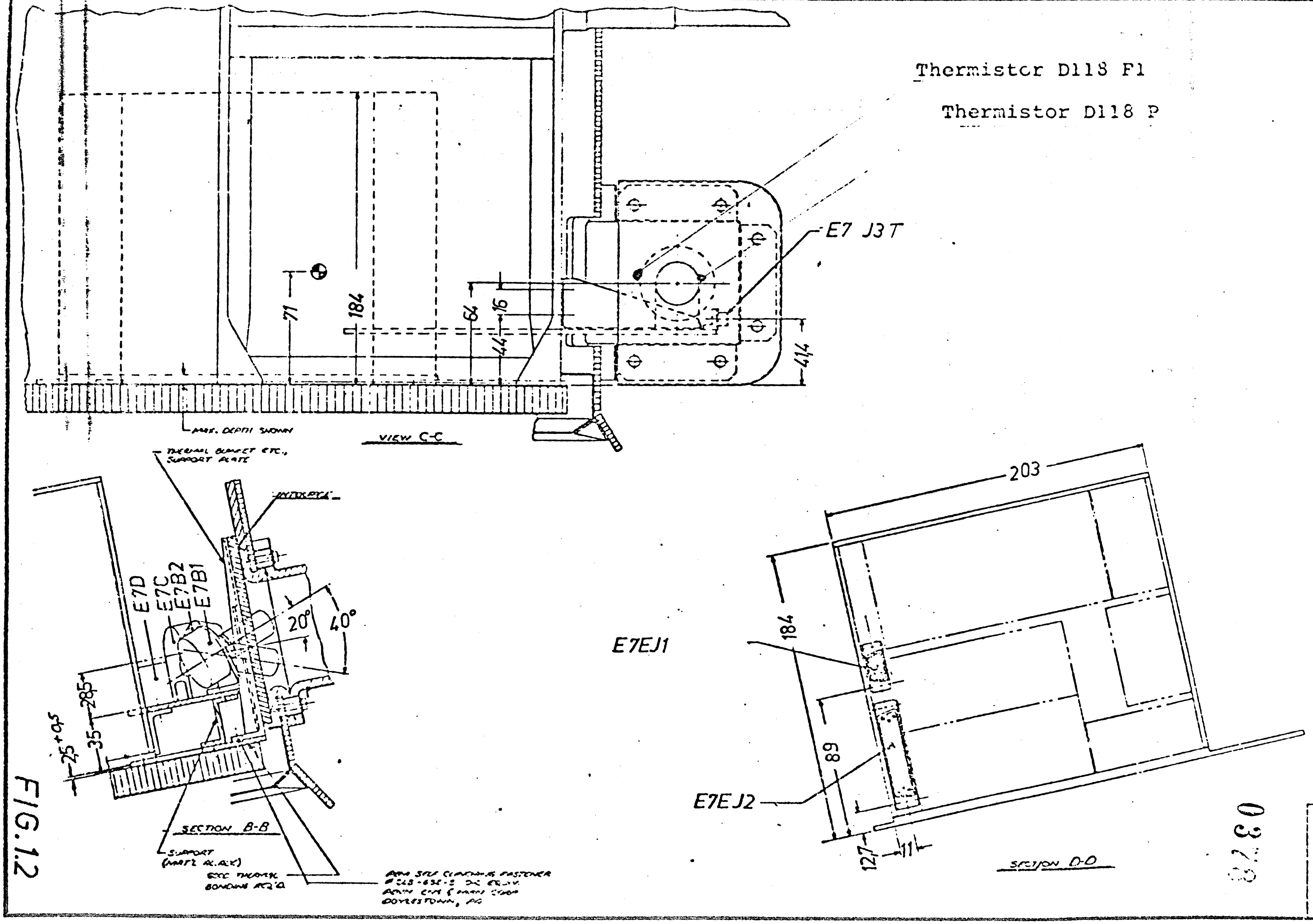

FIG.1.2

PROJECT HELIOS

I 3.
p 5

E7

0370

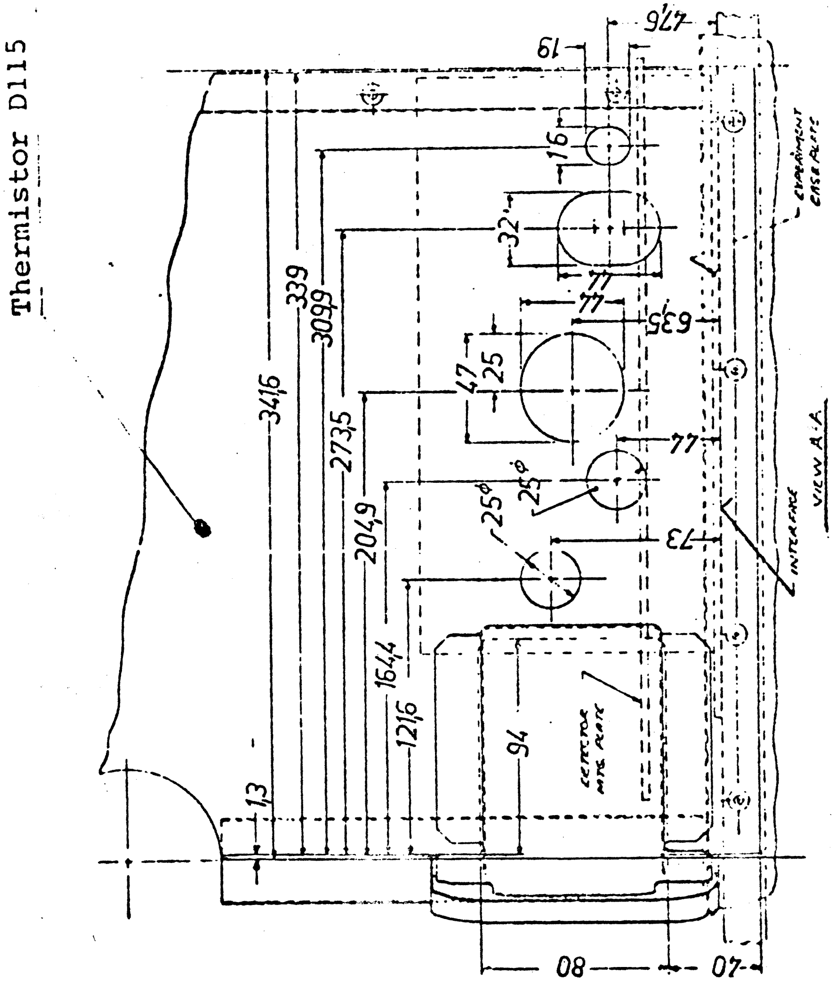

HELIOS B TAGS

particle penetrated and other non-related housekeeping bits.

The tag bit assignments for HET and LET PHA data blocks is as follows:

	DATA CONTENTS	
Tag Bit	HET (Bit 47=0)	LET (Bit 47=1)
(46) T3	Sector ID (2^2)	Sector ID (2^1)
T4	Sector ID (2^1)	Sector ID (2^1)
T5	Sector ID (2^0)	Sector ID (2^0)
T6	Event Type Code (2^1)	Event Type Code
T7	Event Type Code (2^0)	Priority
T8	CII Range	B42
T9	Priority Rank Bit S1	A44
T10	Priority Rank Bit S2	A43
T11	γ Ray Mem. R/O Enable	A42
(39) T12	γ Ray ID	γ Ray ID

Each PHA data word specifies the amplitude of the pulse in a specific detector as indicated below:

PHA Data Word	HET (E7a)	LET (E7c)
Word 1	A when H Tag T6 = 1 CIII " " " = 0	DI
Word 2	B	DII
Word 3	CI+CII	E

The event type code (2 bits for HET, 1 bit for LET) specifies which of several coincidence conditions initiated the analysis. HET Tag T-6 is essentially an inverted CIII penetration indicator; when HT-6=0, the particle penetrated through the stack to CIII and the associated HET PHA Word 1 contains the amplitude of CIII. If HT-6=1, the particle did not penetrate to CIII (whose output is therefore zero) and PHA Word 1 contains the amplitude of detector A. LET-Tag T-6 is also a penetration indicator, but includes amplitude requirements as well. If LET-Tag T-6=1, the summation DI+DII+1.6E

#45 - B43

- readout in HK

#47 first cut B44

Charlie:

Helios A/CIII tag bits are:

T7 = 0, CIII

T7 = 1, A

MSB LSB
T6 T7
null ~~no~~ event reads out as 0 0

Event Priority (~~coded~~ as printed)

R.H. Column

T9, (S1)	T10 (S2)	x = Printed #	Highest ⟶ Lowest
0	0	0,1	$A_1BK_2\overline{CIII}$ (6,7); $(A_2K_1+A_1CI)B\overline{CIII}$ (2,3); A_2BCIII (4,5); $A_1\overline{A_2}BCIII$ (0,1)
1	0	4,5	$(A_2K_1+A_1CI)B\overline{CIII}$ (2.3); $A_1BK_2\overline{CIII}$ (6,7); A_2BCIII(4,5); $A_1\overline{A_2}BCIII$(0,1)
0	1	2,3	A_2BCIII (4,5); $A_1BK_2\overline{CIII}$ (6,7); $(A_2K_1+A_1CI)B\overline{CIII}$ (2,3); $A_1\overline{A_2}BCIII$ (0,1)
1	1	6,7	$A_1\overline{A_2}BCIII$(0,1); $A_1BK_2\overline{CIII}$ (6,7); $(A_2K_1+A_1CI)B\overline{CIII}$ (2,3); A_2BCIII (4,5)

A/cIII

6 ✓7 cIIR (1=penetrate te..

eff column

~~6~~ ~~9~~ 8 Center column = 2 9, 10

0 1 -

0 0 1 = 1

0 0 0 0

0 0 - 0

0 0 0

S1	S2	
1	1	6
1	0	4
0	1	2
1	1	6
0	0	0

0 1 1 Cal A&B on $\boxed{3}$

0 1 0 CAL A only $\boxed{2}$

$\underbrace{0 \quad 1}$ 1 CAL A&B $\boxed{3}$

$01 = (A_2 K_1 + A_1 c\text{I})\, B\, \overline{c\text{III}}$

1 1 1 CAL A&B on, Ext. Pulses into B $\boxed{7}$

1 1 0 CAL A only, CII R=0, Ext. Pulses into B 6

Event cycle 11 $\Rightarrow A_1 B_1 K_2 \overline{c\text{III}}$

1 0 0 CAL A only Ext. Pulses into cIII 4

1 0 1 CAL A&B only Ext. Pulses into cIII 5
cIIR = on

Event cycle 10 $\Rightarrow A_2 B c\text{III}$

APPLICATION		REVISIONS			
NEXT ASSY	USED ON	LTR	DESCRIPTION	DATE	APPROVED
			A_2K_2 ambiguous term → $A_1BK_2C\overline{III}$ event type		

CHANGE BY ECO ONLY

DATE

SEQUENCE ID BITS		EXTERNAL ID BITS		INTERNAL ID BIT	REMARKS
S1	S2	I_1	I_2	I_3	
0	0	0	0	0	XX SYSTEM WILL ACCEPT $A_1\overline{A_2}BCIII$ FOR ANALYSIS.
0	0	0	0	1	XX ACCEPT A_2BCIII
0	0	1	0	1	X ACCEPT A_2BCIII AS MANY TIMES AS IT APPEARS OR $(A_2K_1+A_1C_1)B\overline{CIII}$
0	0	0	1	1	X ACCEPT $(A_2K_1+A_1CI)B\overline{CIII}$ AS MANY TIMES AS IT APPEARS OR $A_1BK_2\overline{CIII}$
0	0	1	1	1	I.D. BITS INDICATE $A_1BK_2\overline{CIII}$ WAS ACCEPTED FOR ANALYSIS BUT NO MORE OF THESE EVENTS WILL BE ACCEPTED. PHA'S REMAIN INACTIVE UNTIL COMPLETION OF THE NEXT READ OUT.
1	0	0	0	0	XXX ACCEPT $A_1\overline{A_2}BCIII$
1	0	0	0	1	XX ACCEPT A_2BCIII
1	0	1	0	1	XXX ACCEPT A_2BCIII AS MANY TIMES AS IT APPEARS OR $A_1BK_2\overline{CIII}$
1	0	1	1	1	X ACCEPT $A_1BK_2\overline{CIII}$ AS MANY TIMES AS IT APPEARS OR $(A_2K_1+A_1C_1)B\overline{CIII}$
1	0	0	1	1	X ACCEPT $(A_2K_1+A_1CI)B\overline{CIII}$ AS MANY TIMES AS IT APPEARS
0	1	0	0	0	X ACCEPT $A_1\overline{A_2}BCIII$
0	1	0	0	1	X ACCEPT $(A_2K_1+A_1CI)B\overline{CIII}$
0	1	0	1	1	X ACCEPT $(A_2K_1+A_1CI)B\overline{CIII}$ AS MANY TIMES AS IT APPEARS OR $A_1BK_2\overline{CIII}$
0	1	1	1	1	ACCEPT $A_1BK_2\overline{CIII}$ AS MANY TIMES AS IT APPEARS OR A_2BCIII
0	1	1	0	1	ACCEPT A_2BCIII AS MANY TIMES AS IT APPEARS
1	1	0	0	0	X ACCEPT A_2BCIII
1	1	1	0	1	X ACCEPT $(A_2K_1+A_1CI)B\overline{CIII}$
1	1	0	1	1	ACCEPT $A_1BK_2\overline{CIII}$
1	1	1	1	1	ACCEPT $A_1BK_2\overline{CIII}$ AS MANY TIMES AS IT APPEARS OR $A_1\overline{A_2}BCIII$
1	1	0	0	1	ACCEPT $A_1\overline{A_2}BCIII$ AS MANY TIMES AS IT APPEARS

UNLESS OTHERWISE SPECIFIED DIMENSIONS ARE IN INCHES.
TOLERANCES ON
DECIMALS FRAC ANGLES
.XX ± ± ±
.XXX ±
CONCENTRICITY .005 TIR
BREAK BURRS & SHARP EDGES
MACH SURFACES 125 ✓
DO NOT SCALE THIS DRAWING

MATERIAL

FINISH

CONTRACT NO

DRAWN

CHECK

MFG

ENG MECH

ENG ELEC

PROJ ENG

QUAL ASSUR

ADDNL APPD

SPACETAC INCORPORATED
BEDFORD, MASSACHUSETTS

"HET" PRIORITY LOGIC OPERATION

8 24 78

SIZE A
CODE IDENT NO. 33105
[illegible]
REV. –

SCALE

SHEET

T10, T9

	~~T7~~ T6 ↓	~~T6~~ T7 ↓
I3	I2	I1
0	0	0
1	0	0
1	0	1
1	1	0
1	1	1

S1, S2 = 00

accept $A_1 \bar{A}_2 B C III$ once

accept Type 0, $A_1 \bar{A}_2 B C III$

" Type 1, $A_2 B \bar{C} III$

2, R1

3, $A_1 B K_2 \overline{C III}$

$A_1 \bar{A}_2 B \overline{C III}$

$A_2 B C III$ as often as $(A_2 K_1 + A_1 C I) B \overline{C III}$

accept $(A_2 K_1 + A_1 C I) B \overline{C III}$ as often as $A_1 B K_2 \overline{C III}$

accept $A_1 B K_2 \overline{C III}$ once

S1 = 1, S2 = 0. 　 bottle $(A_2 K_1 + A_1 C I) B \overline{C III}$

S1 = 0, S2 = 1 　 bottle $A_2 B C III$

S1 = 1, S2 = 1 　 bottle $A_1 \bar{A}_2 B C III$

Center Column

$$\underbrace{\begin{matrix} T6 & T7 \\ (4) & (2) \end{matrix}}_{\text{Event Type:}} \quad \begin{matrix} T8 \\ (1) \end{matrix}$$

↳ T8 - C_{II} range bit, "1" ⇒ penetration into C_{II}

0	0	$A_1 \overline{A_2} B \overline{C_{III}}$	0,1	0
0	1	$(A_2 K_1 + A_1 C_I) B \overline{C_{III}}$	2,3	2
1	0	$A_2 B \overline{C_{III}}$	4,5	1
1	1	$A_1 B K_2 \overline{C_{III}}$	6,7	3

↑ T7 is A/C_{III} bit

R. H. Column

T9 T10 T11

$$\underbrace{S1 \quad S2}_{\text{commutator bits, indicate priority ranking}}$$

			TOP PRIORITY EVENT
0,1	0	0	6,7
[illegible]	1	0	2,3
	0	1	4,5
	1	1	0,1

Helios B GRB Meeting ①

Cline, Spicer (Aldo), Nand, JAM, Guels,

- generally Cline wants Tape (GRB) to contain all info except Trainor exp data

- need to write out on DRP runs, when a "Trigger" occurred so Cline, etal can process immediately those days ~~d~~ when "trigger" occurred.

- also - ~~need Tape c.~~ need GMT, &, MS of Day

- also - need attitude info
  - NO - since a merge would hold up processing because O/A Tapes arrive 4-6 wks later

also ~~R_{15} & R_{18A} & R_{18B}~~,
→ all of R_{15}, R_{17}, R_{18}, R_{19} Rates

→ HELDRP - <u>print only</u> if & when trigger occurred
also <u>print</u> housekeeping data

Stilwell will Tell Germans to let us know when GRB Trigger occurs

36

18

	HK 0	3 Thresholds	3 Random mem	Calendar Time	Acc A, B	Disc A,B
col =	12	15	15	13	16	4

42

55

D	h	m	s
3	2	2	2

mem Cn
4

4^{8}
600

95 col

Trig ctr	Ametr
2	16

60

6 3600 bytes

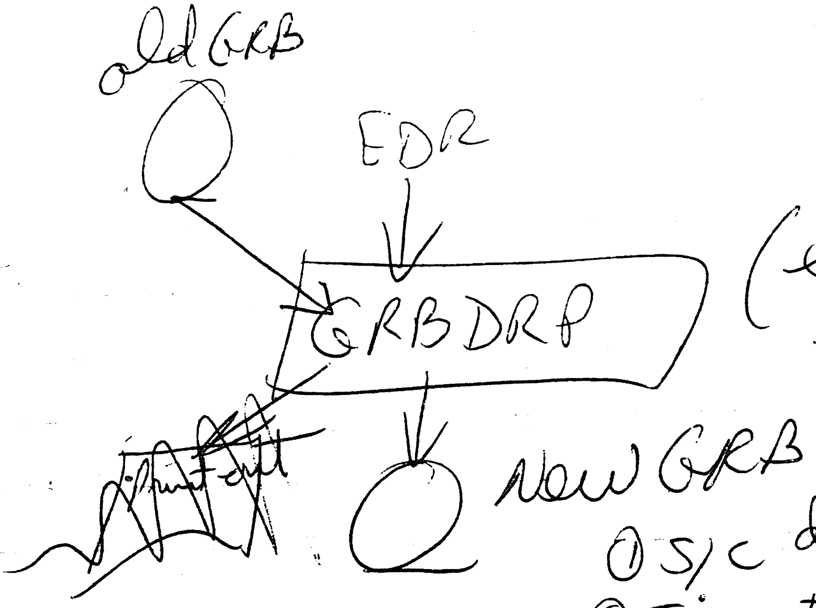

(essentially HELDRP but no pha tape etc)

① S/C data

② Time tags frame #

③ Housekp if present

④ R_{17} ... R_{19} if present, SR_2, SR_3

⑤ averaging Time

⑥ additional HK data:

(a) GRM Enable ~~Deleted~~

(b) Discriminator A B Flag 35,13 36,13

HELDRP Print: Mem,

RATE
TABLE: (4,8,16)

①

WORD, SEQ, LINE

(1,1,1) = 0
(2,1,1) = 187
(3,1,1) = 186
(4,1,1) = 185
(1,2,1) = 0
(2 = 187
(3 = 186
(4 = 185
(1,3,1) = 0
(2 = 187
(3 = 186
(4 = 185
(1,4,1) = 0
(2 = 187
(3 = 186
(4 = 185
(1,5,1) = 0
(2 = 187
(3 = 186
(4 = 185
(1,6,1) = 0
(2) = 187
(3) = 186
(4) = 185
(1,7,1) = 0
(2,7,1) = 187

(3,7,1) = 186
(4 = 185
(1,8,1) = 0
(2 = 187
(3 = 186
(4,8,1) = 185
(1,1,2) = 202
(2 = 190
(3 = 189
(4 = 188
(1,2,2) = 221
(2 = 190
(3 = 189
(4 = 188
(1,3,2) = 202
(2 = 190
(3 = 189
(4 = 188
(1,4,2) = 221
(2 = 190
(3 = 189
(4 = 188
(1,5,2) = 202
(2 = 190
(3 = 189
(4,5,2) = 188

(1,6,2) = 221
(2 = 190
(3 = 189
(4 = 188
(1,7,2) = 202
(2 = 190
(3 = 189
(4 = 188
(1,8,2) = 221
(2 = 190
(3 = 189
(4,8,2) = 188
(1,1,3) = 202
(2 = 213
(3 = 192
(4 = 191
(1,2,3) = 221
(2 = 213
(3 = 192
(4 = 191
(1,3,3) = 202
(2 = 213
(3 = 192
(4 = 191
(1,4,3) = 221
(2,4,3) = 213

(3,4,3) = 192
(4, = 191
(1,5 3) = 202
(2 = 213
(3 = 192
(4 = 191
(1,6,3) = 221
(2 = 213
(3 = 192
(4 = 191
(1,7 3) = 202
(2 = 213
(3 = 192
(4 = 191
(1,8,3) = 221
(2 = 213
(3 = 192
(4 = 191
(1,1,4) = 202
(2 = 212
(3 = 211
(4 = 209
(1,2,4) = 221
(2 = 231
(3 = 230
(4,2,4) = 228

(1,3,4)= 202
(2 = 238
(3 = 237
(4 = 235
(1,4,4) = 221
(2 = 245
(3 = 244
(4 = 242
(1,5,4) = 202
(2 = 212
(3 = 211
(4 = 209
(1,6,4)= 221
(2 = 231
(3 = 230
(4 = 228
(1,7,4) = 202
(2 = 238
(3 = 237
(4 = 235
(1,8,4)= 221
(2 = 245
(3 = 244
(4,8,4)= 242
(1,1,5)= 0
(2,1,5)= 197

(3,1,5)= 196
(4 = 195
(1,2,5)= 0
(2 = 216
(3 = 215
(4 = 214
(1,3,5)= 0
(2 = 197
(3 = 196
(4 = 195
(1,4,5)= 0
(2 = 216
(3 = 215
(4 = 214
(1,5,5)= 0
(2 = 197
(3 = 196
(4 = 195
(1,6,5)= 0
(2 = 216
(3 = 215
(4 = 214
(1,7,5)= 0
(2 = 197
(3 = 196
(4,7,5)= 195

(1,8,5)= 0
(2 = 216
(3 = 215
(4,8,5)= 214
(1,1,6)= 194
(2 = 200
(3 = 199
(4 = 198
(1,2,6)= 194
(2 = 219
(3 = 218
(4 = 217
(1,3,6)= 194
(2 = 200
(3 = 199
(4 = 198
(1,4,6) = 194
(2 = 219
(3 = 218
(4 = 217
(1,5,6)= 194
(2 = 200
(3 = 199
(4 = 198
(1,6,6)= 194
(2,6,6)= 219

(3,6,6)= 218
(4 = 217
(1,7,6)= 194
(2 = 200
(3 = 199
(4 = 198
(1,8,6)= 194
(2 = 219
(3 = 218
(4,8,6)= 217
(1,1,7)= 194
(2 = 204
(3 = 203
(4 = 201
(1,2,7)= 194
(2 = 223
(3 = 222
(4 = 220
(1,3,7)= 194
(2 = 204
(3 = 232
(4 = 201
(1,4,7)= 194
(2 = 223
(3 = 239
(4,4,7)= 220

(1,5,7)= 194
(2 = 204
(3 = 246
(4 = 201
(1,6,7)= 194
(2 = 223
(3 = 249
(4 = 220
(1,7,7)= 194
(2, = 204
(3 = 252
(4 = 201
(1,8,7)= 194
(2 =223
(3 = 255
(4,8,7)= 220
(1,1,8)= 194
(2 =208
(3 =206
(4 =205
(1,2,8)= 194
(2 =227
(3 =225
(4 =224
(1,3,8)=194
(2,3,8)=234

(3,3,8)= 206
(4 =205
(1,4,8)= 194
(2 =241
(3 =225
(4 =224
(1,5,8)=194
(2 =208
(3 =206
(4 =205
(1,6,8)= 194
(2 =227
(3 =225
(4 =224
(1,7,8)= 194
(2 =234
(3 =206
(4 =205
(1,8,8)= 194
(2 =241
(3 =225
(4,8,8)=224
(1,1,9)=0
(2 =113
(3 =41
(4,1,9)= 5

(1,2,9)=0
(2 =122
(3 =50
(4 =14
(1,3,9)=0
(2 =131
(3 =59
(4 =23
(1,4,9)= 0
(2 =140
(3 =68
(4 =32
(1,5,9)=0
(2 =149
(3 =77
(4 =5
(1,6,9)=0
(2 =158
(3 =86
(4 =14
(1,7,9)= 0
(2 =167
(3 =95
(4 =23
(1,8,9)=0
(2,8,9)= 176

(3,8,9)= 104
(4,8,9)= 32
(1,1,10)= 207
(2 =114
(3 =42
(4 =6
(1,2,10)=226
(2 =123
(3 =51
(4 =15
(1,3,10)= 233
(2 =132
(3 =60
(4 =24
(1,4,10)=240
(2 =141
(3 =69
(4 =33
(1,5,10)=247
(2 =150
(3 =78
(4 =6
(1,6,10)= 250
(2 =159
(3 =87
(4,6,10)= 15

(1,7,10) = 253
(2 = 168
(3 = 96
(4 = 24
(1,8,10) = 256
(2 = 177
(3 = 105
(4,8,10) = 33
(1,1,11) = 207
(2 = 115
(3 = 43
(4 = 7
(1,2,11) = 226
(2 = 124
(3 = 52
(4 = 16
(1,3,11) = 233
(2 = 133
(3 = 61
(4 = 25
(1,4,11) = 240
(2 = 142
(3 = 70
(4 = 34
(1,5,11) = 247
(2,5,11) = 151

(3,5,11) = 79
(4 = 7
(1,6,11) = 250
(2 = 160
(3 = 88
(4 = 16
(1,7,11) = 253
(2 = 169
(3 = 97
(4 = 25
(1,8,11) = 256
(2 = 178
(3 = 106
(4,8,11) = 34
(1,1,12) = 207
(2 = 116
(3 = 44
(4 = 8
(1,2,12) = 226
(2 = 125
(3 = 53
(4 = 17
(1,3,12) = 233
(2 = 134
(3 = 62
(4,3,12) = 26

(1,4,12) = 240
(2 = 143
(3 = 71
(4 = 35
(1,5,12) = 247
(2 = 152
(3 = 80
(4 = 8
(1,6,12) = 250
(2 = 161
(3 = 89
(4 = 17
(1,7,12) = 253
(2 = 170
(3 = 98
(4 = 26
(1,8,12) = 256
(2 = 179
(3 = 107
(4,8,12) = 35
(1,1,13) = 0
(2 = 117
(3 = 45
(4 = 9
(1,2,13) = 0
(2,2,13) = 126

(3,2,13) = 54
(4 = 18
(1,3,13) = 0
(2 = 135
(3 = 63
(4 = 27
(1,4,13) = 0
(2 = 144
(3 = 72
(4 = 36
(1,5,13) = 0
(2 = 153
(3 = 81
(4 = 9
(1,6,13) = 0
(2 = 162
(3 = 90
(4 = 18
(1,7,13) = 0
(2 = 171
(3 = 99
(4 = 27
(1,8,13) = 0
(2 = 180
(3 = 108
(4,8,13) = 36

(1,1,14)= 210 ✓
(2 = 118 ✓
(3 = 46 ✓
(4 = 10 ✓
(1,2,14)= 229 ✓
(2 = 127 ✓
(3 = 55 ✓
(4 = 19 ✓
(1,3,14)= 236 ✓
(2 = 136 ✓
(3 = 64 ✓
(4 = 28
(1,4,14)= 243 ✓
(2 = 145 ✓
(3 = 73 ✓
(4 = 37 ✓
(1,5,14)= 248 ✓
(2 = 154 ✓
(3 = 82 ✓
(4 = 10 ✓
(1,6,14)= 251 ✓
(2 = 163 ✓
(3 = 91 ✓
(4 = 19
(1,7,14)= 254 ✓
(2,7,14)= 172 ✓

(3,7,14)= 100 ✓
(4 = 28 ✓
(1,8,14)= 257 ✓
(2 = 181 ✓
(3 = 109 ✓
(4,8,14)= 37 ✓
(1,1,15)= 210 ✓
(2 = 119 ✓
(3 = 47 ✓
(4 = 11 ✓
(1,2,15)= 229
(2 = 128 ✓
(3 = 56 ✓
(4 = 20 ✓
(1,3,15)= 236 ✓
(2 = 137 ✓
(3 = 65 ✓
(4 = 29 ✓
(1,4,15)= 243 ✓
(2 = 146 ✓
(3 = 74 ✓
(4 = 38
(1,5,15)= 248 ✓
(2 = 155
(3 = 83
(4,5,15)= 11 ✓

(1,6,15)= 251 ✓
(2 = 164 ✓
(3 = 92 ✓
(4 = 20 ✓
(1,7,15)= 254 ✓
(2 = 173 ✓
(3 = 101 ✓
(4 = 29 ✓
(1,8,15)= 257 ✓
(2 = 182 ✓
(3 = 110 ✓
(4,8,15)= 38 ✓
(1,1,16)= 210 ✓
(2 = 120 ✓
(3 = 48 ✓
(4 = 12 ✓
(1,2,16)= 229 ✓
(2 = 129 ✓
(3 = 57 ✓
(4 = 21 ✓
(1,3,16)= 236 ✓
(2 = 138 ✓
(3 = 66 ✓
(4 = 30 ✓
(1,4,16)= 243 ✓
(2,4,16)= 147 ✓

(3,4,16)= 75 ✓
(4 = 39 ✓
(1,5,16)= 248 ✓
(2 = 156 ✓
(3 = 84 ✓
(4 = 12 ✓
(1,6,16)= 251 ✓
(2 = 165 ✓
(3 = 93 ✓
(4 = 21 ✓
(1,7,16)= 254 ✓
(2 = 174 ✓
(3 = 102
(4 = 30
(1,8,16)= 257
(2 = 183
(3 = 111
(4,8,16)= 39

Appendix A - Helios 1 and 2 Hardware

This Appendix was taken from the "User's Manual for the Helios Spacecraft" and describes the Cosmic Ray Experiment Hardware.

from doc
CSC
(cover of folder)

E(ev)

EXPERIMENT DESCRIPTION

I. Physics of the Experiment

The E7 charged particle experiment consists of 3 sensor systems for the measurement of charged particles (E7A, E7B and E7C), plus a gas proportional counter (E7D) which predominantly responds to X-ray photons in the energy range 2 to 8 KeV. The charged particle detector 6.2Å 1.55Å systems are made up of from 4 to 7 silicon diodes operated with a reverse bias adequate to fully deplete the diodes. If a charged particle passes through a diode, ionization along the path through the detector results in hole-electron pairs being formed along this path. The applied electric field (detector bias voltage) causes the charge to be swept up, forming a charge pulse which is then accurately measured by the electronics.

In the most usual case, several detectors will be penetrated by the charged particle, so that a particular event is usually characterized by several specific energy losses plus a range measurement. From ground calibration, one is able then to relate this information to an element or isotope of an element at a precise energy. Figure 1 summarizes the response of experiment E7 as a function of energy and charge. Positive ions are well covered through Neon (Z=10). The experiment measures the time history, energy spectra and angular distribution of these particles.

The gas proportional counter really is two independant counters sharing one pressure vessel. The primary X-ray data is obtained through a very narrow collimator (0.2865°). Using on-board electronics, one can accumulate data in 8 sections of 0.17° or 0.34° centered on the sun. Since the sun subtends an angle of ∿ 0.5° at launch and ∿ 1.7° at 0.3 AU, such a system allows us to crudely monitor and locate sources of solar activity, even on the side of the sun not visible from earth.

The second aperature of the proportional counter is viewed by means of a 53° collimator which is also covered by two aluminized kapton foils. These foils prevent the entrance of low energy X-rays, and this counter is used to monitor detector background, as well as low energy solar electrons. This data is sectored 8 times with respect to 360° of spacecraft rotation.

II. Hardware Description

A. Mechanical Configuration.

Figure 2 gives top and side views of the experiment, including the outer wall of the spacecraft, through which the sensors view. E7A is the high energy telescope (HET), a nuclear particle telescope with proper response and operation for particles entering through either the front or rear conical field of view. Thus, of necessity, E7A is mounted in a small box protruding from the main spacecraft wall in the +X direction.

E7B or the very low energy telescope (LET-2) actually consists of two identical sensor systems with 30° conical field of views. These sensors are tilted 20° above and below the equatorial plane containing the sun as shown in the side view. As a result, the sun is not able to illuminate the first sensor of E7B; we do not require a thermal foil over E7B; and thus we may measure very low energy protons and alpha particles.

E7C is the low energy telescope 1 (LET-1) with a response intermediate between E7A and E7B. This telescope has a conical field of view of 50° which is covered by a 6.4 micron foil of aluminized Kapton. The gas proportional counter is directly beside E7C and has already been adequately described. The rectangular electronics box is immediately inboard of the various detector assemblies.

B. E7A Sensor System

The E7A sensor system is shown schematically in Figure 3. Charge pulses are converted to voltage pulses; shaped and amplified as necessary; and if the proper logic conditions are satisfied, the proper linear gates are opened and the pulse height is digitized to 10 bits.

A number of tag bits are also necessary to completely describe the event. At the bit rates to be expected, the experiment will often only be sampling the solar and galactic cosmic ray fluxes in the pulse height analysis (PHA) mode. In addition, several rates are noted in Figure 3 which are routinely monitored for rapid time histories, normalizations of the PHA data and angular distributions. E7A also contains a rolling priority system which enables the emphasis of rare events in the data. Figure 4 shows the E7A sensor system in more detail, particularly the logical and physical definitions of the E7A rates which will be described further later in this document.

C. E7B Sensor System

Figure 5 outlines the E7B sensor system. In this relatively simple system charge pulses are converted to voltage pulses, amplified and shaped, and presented to a series of 4-level integral analyzers (4-step, programmable threshold discriminators). A large number of logical rates are formed (R15, R16, R17, SR2a and SR2b) and commutated as detailed in the logic equations in Figure 5.

D. E7C Sensor Systems

The E7C system is shown in Figure 6 and in many ways is a simple version of E7A. Particle entry is possible only through the front field of view (F events are always logically excluded) and the condition for PHA analysis is $D_1 D_2 \overline{F}$, and the output pulses from D_1, D_2 and E are pulse height analyzed to 10 bits accuracy. The various tag bits are identified on the figure as well as the various rates which are monitored. Figure 7 shows the E7C system with a higher level of detail, including an 8-level intergral analyzer monitoring low energy protons and alpha particles in D.

E. The E7D Proportional Counter System

In this detector system the pulses are amplified, and those corresponding to 2 to 8 KeV deposited in the detectors are selected and counted. Events from the narrow angle collimator are commutated into 8 counters corresponding to 8 narrow strips centered on the sun, while those events from the wide collimator window are counted in the unsectored X-ray counters (USXR).

F. Commands and Housekeeping Data

This area of discussion is rather involved and is discussed in some detail in the next chapter.

III. Functional Description

A. Commands

1. C 047 High Voltage ON/OFF (HiV.)

A separate 12 volt to 1700 volt DC converter provides high voltage to the X-ray proportional counter (E7D). The 12 volt input is energized through a transistor switch controlled by a flip-flop in the data system. The state of the flip-flop is reset to "0" = OFF when power is first applied to the experiment. Commands C 047 are applied to the clock input, hence each command received toggles the control flip flop from its present state to the complement. The High Voltage supply may be turned either on or off by successive applications of this command. The state of the flip flop is readout in bit 5 of the status word (bit 1 is MSB).

2. C 351 Force Black-Out Mode (FBOM)

When the S/C is in the Black-Out Mode (as determined by DM bit 3, i.e. DM 4, 5, 7) the experiment data system deletes all PHA data from the science output data stream. Since this ordinarily happens only at 8 BPS, the FBOM command was included in the experiment to permit checkout of this mode of operation in the S/C at any bit rate, and also to provide more rapid operation of the experiment through its complete data sequence (EDF) at all bit rates. A single flip-flop in the data system determines whether or not E-7 is in the BOM. This flip-flop is not reset when power is applied, and hence may come on in either state. Whenever DM bit 3 is a "1" indicating DM 4, 5, or 7 the flip-flop is reset, forcing E-7 into BOM operation. During DM-4, 5, 7, the flip-flop

C347

is forced to the "0" state, and command C 351 has no effect since it is applied at the toggle input. The flip-flop will remain in the "0" state forever, even after the S/C returns to a non-blackout data mode, unless a C 351 command is applied to toggle the flip-flop back to the "1" state. When in DM 0, 1, 2, or 3, E-7 may be commanded into or out of the FBOM by successive applications of C 351. The state of the FBOM flip-flop is readout in bit 7 of the status word.

3. C 330 Sector Synchronizer ON/OFF (SS)

The data system includes three sets of eight counters each (SR1, SR2, and SR3) for accumulating sectored rate data. The accumulation interval, or "live-time," may be determined by either the read-out cycle (i.e. synchronized to telemetry), or by the sectoring signals SPO and SP11 ÷ 512. Each counter consists of a 24 bit binary counter, a log compressor, and a 12 bit storage register for data readout in a single large-scale-integrated circuit flatpack, as described in a previous section. Application of a "transfer" pulse (which is always telemetry synchronous) closes an input gate so that no more counts may be accumulated, and initiates the log compression routine which lasts ≤ 5 ms. The compressed data is stored in the 12 bit output register. Additional input gating insures that no input counts are applied except during a specified 45° (1/8 revolution) interval, for each of the 24 counters.

When SS in ON, the live time always begins on the first SPO after a transfer pulse. During the first 1/8 revolution, pulses to be counted are applied to SR1-1, SR2-2, and SR3-2, etc. This process continues, with all 3 SR inputs being steered to the appropriate 1-of-8 counters, for a prescribed number of total S/C spins. The accumulation interval ends when the number of SPO's counted in a separate spin counter reaches a prescribed number, which depends on bit rate and format in use. This number was calculated using a lowest possible spin rate of 58.9 RPM to yeild a maximum live time between telemetry-synchronized transfer pulses. The SS system thus insures that the sectored rate counters are live for an exact integral number of spins.

When SS is off, the SR's are always allowed to count during their respective 45° intervals, and are always transferred to readout storage. Hence, the live times for each 45° interval are not necessarily equal.

SS ON/OFF is controlled by a flip-flop which is toggled by command C 330. The flip-flop is not reset by power-on and may come on in either state. The flip-flop status is readout in bit 6 of the status word.

4. C 026 Calibrate Command (CAL)

Two sources of experiment-internal electrical stimulus (CAL A and CAL B) are controlled by two flip-flops connected as a conventional ripple counter. Each flip-flop is connected to a gate which allows the 2048 PPR (SP11) pulses to be applied (after appropriate shaping and amplitude modification) to selected preamp inputs. This creates a known pattern of coincidence conditions in the rate data and provides PHA of prescribed pulse amplitudes. The CAL flip-flops (A and B) are both reset to the "0" state by power on. C 026 is applied to the toggle input of flip-flop A, so each successive command toggles A from OFF to ON (0 → 1) or ON to OFF (1 → 0). Each 1 → 0 of CAL A toggles CAL B, hence four successive applications of C 026 are required to cycle through the four

0349

possible states of the two flip-flops. The state of CAL A and CAL B are readout in bits 3 and 4 respectively of the status word.

5. C 005 X-ray clock (CLK)
C 372 X-ray DATA (DATA)

These two commands are used in combination to serially load an 8 bit shift register in the data system. Five of the eight bits are used to establish the X-ray offset value, which is the number of SP11 pulses which will occur between the SPO pulse and the time when the narrow angle X-ray counter (E7D), which is ~ 1° wide, intersects the edge of the solar disc. This number will nominally be 104 SP11 pulses corresponding to $\frac{104}{2048}$ x 360 degrees. The offset value is preset to 88 + M, when M is the 5 bit number entered by CLK and DATA in the X-ray command and Execute Registers. Of the 3 remaining bits, one is a spare bit (SP) and is not used but must <u>always</u> be entered, one controls the width of an X-ray sector (SWB=sector width bit), and one controls the operation of the X-ray sector synchronizing system to provide a self-check of the X-ray offset value. This last bit is designated XRSDM, or more frequently D for short.

The shift register receives its data input from an input flip-flop (not part of the shift register). The DATA Command C 372 always toggles this data input flip-flop from 1 →0, or 0 →1. The state of this flip-flop is readout in bit 2 of the status word. The CLK command C 005 clocks data one stage to the right in the shift register, allowing the state of the data flip-flop to be entered from the left. C 005 also resets the data input flip-flop to zero immediately after shifting. Hence, repeated application of C 005s will eventually load all eight stages of the X-ray command register with zeros. Whenever a "1" is to be entered, a DATA command C 372 will toggle the input flip-flop to "1" and the next CLK command then enters the "1". This sequence designated [372, 005] in the example to follow. Bits are entered in the order $\overline{16}$, $\overline{8}$, $\overline{4}$, $\overline{2}$, $\overline{1}$, N (SWB = Narrow = 1), D (XRSDM). If the N bit is entered as a "0", the result is a wide sector, which is designated W in the example below. The X-ray offset value is entered in complement form, i.e. entering a "0" causes that binary weight to be included in the total offset value.

To set up the X-ray command register in the state 25 WD, "0" should be entered in the $\overline{16}$, $\overline{8}$ and $\overline{1}$ bits to establish M=25, a "0" in the SWB bit establishes wide sectors, and a "1" in the XRSDM bit sets the internal self check mode On (D). When starting a sequence of CLK and DATA commands, it is useful, but not necessary, to always send an extra CLK command to ensure that the data input flip-flop is reset to "0". Verification of the flip-flop state is thus not necessary. The sequence of commands will then be:

005	reset input flip-flop
2 x 005	$\overline{16}$, $\overline{8}$ = 0
2 x [372,005]	$\overline{4}$, $\overline{2}$ = 1
005	$\overline{1}$ = 0
005	SWB = $\overline{N}$ (i.e. wide)
[372,005]	XRSDM = ON

Verification of the X-ray Command Register status is included in the science data (Rate Data Block 1, bits 37-43). The register status is not effective until transferred to the X-ray Execute Register (readout in Rate Data Block 5, bits 37-43). Transfer always occurs on a 1 →0 transition of the CAL A flip-flop, so that CAL commands C 026 (usually 4 successive commands) ill normally be used in addition to C 005 and C 372 when commanding the X-ray system.

B. Analog and Digital Housekeeping Data

The digital housekeeping word is reserved for readout of the experiment command system status. Each of the various commandable functions is controlled by a separate binary flip-flop which is toggled (not set or reset) by ground command. If the first bit readout in time (MSB) is designated Bit 1, the status bits represent the following information:

BIT	FUNCTION AND COMMAND
1	Not Used
2	X-ray DATA (see C372)
3	Internal Calibrator A ON (C026)
4	Internal Calibrator B ON (C026)
5	X-ray Hi Voltage ON (C047)
6	Sector Synchronizer (SS) ON (C330)
7	Force Black-out MODE (FBOM) Off (C351)
8	X-ray Sector Synchronizer Data Mode (XRSDM) ON (C-005/372)

In all cases, the functions listed above correspond to a logical 1 in the NRZ data (i.e., 0 volts at the interface connector). All are true logic except Bit 7.

The fourteen analog voltages ASE7-01 through ASE7-14 are used to measure temperatures at various locations within E-7, and most of the output voltages from the low-voltage converter.

Temperature measurements are made with a thermistor-resistor voltage divider network powered from the E7 and 7.75 volt secondary voltage. The thermistors are mounted on metal tabs with epoxybonding

TABLE 1

E7 ANALOG TEMPERATURE MONITORS

NAME	FMI-ID	TEMPERATURE MEASURED
ASE7-01	D-42	HET(E7A)
ASE7-02	D-43	VLET2 (E7B2)
ASE7-03	D-44	Detector Mounting Plate
ASE7-04	D-45	X-ray Detector (E7D)
ASE7-05	D-46	VLET-1 (E7B1) Funnel
ASE7-06	D-47	LET (E7C) Funnel
ASE7-07	D-48	Electronics (Internal to box)
ASE7-08	D-49	Base-Plate (Rear)
ASE7-14	D-55	Base-Plate (Front)

agent within a heat-shrinkable tube. The metal ta

for attaching with machine screws.

Conversion relationship from temperature to

$$T = 50 - 17.5 \text{ V-out}$$

where T is degrees centigrade and V-out is the an

by the S/C A-D converter. Identification of channel and thermistor location is shown in Table 1 and Figure

The power supply voltages are monitored directly using only a resistor divider network to bring the output voltage within the 0-5.0 volt range. Conversion relationship between telemetered voltage (V-out) at the interface and actual output voltage from the power supply by being monitored is different for each voltage and is shown in the table below.

TABLE 2

NAME	FMT-ID	VOLTAGE MONITORED	CONVERSION
ASE7-09	D-50	+12V	V=2.62 V out
ASE7-10	D-51	+6V(digital)	V=1.56 V out
ASE7-11	D-52	+6V(analog)	V=1.56 V out
ASE7-12	D-53	+7.75V	V=1.90 V out
ASE7-13	D-54	+4.7V	V = V out

C. Data Collection

The E7 Cosmic Ray Experiment provides two distinct types of data in the science output: Rate Data and Pulse-height Analysis (PHA) Data.

Rate Data represents the total number of cosmic ray particles passing through a detector assembly (telescope) during an accumulation interval. Each particle is categorized by the amplitude and coincidence characteristics of the signal from various detectors, and a count is

entered into the appropriate counter(s). Section 2 includes a list of all rate coincidence conditions, and figure (Rate Data Format) shows how this data appears in telemetry.

The rate counting system includes 52 MOS LSI counters (24 bit with 12 bit log compressed readout). All unsectored counters are simultaneously converted to log form and stored for readout immediately following the occurrence of Rate Line 16 in the rate data. The sectored counters (when S.S. is on) may be converted to log and stored at any time during Rate Lines 1-7 upon completion of the spin synchronized accumulation interval, but not during Lines 8-16. This prevents transfer in the middle of the Sectored Rate readout sequence. When S.S. is off, the sectored rate counters are transferred simultaneously with the unsectored rate counters.

Each of the 52 rate counters (except R1 and R20) are Time shared (i.e. commutated) among several different rates. The number of commutator positions is always binary (i.e. 2, 4, or 8), and the position ID is included in bits 41, 42, and 43 of the 48 bit rate block. The ID readout indicates the position of the commutator at the time data was acquired (i.e. during the previous accumulation interval), not the present position. After completion of the rate readout sequence (Line 16) the commutates position and all rate counter data is transferred to readout storage and the commutators advanced to the next position.

PHA Data represents the exact amplitude of the pulses (to one channel in 1024) from three selected detectors in the HET (E7A) or from LET (E7C) for a single cosmic ray event. Additional tag bits further identify the

particle as to coincidence condition, range, direction of arrival (from sector information), and other parameters of interest. Each PHA event represents the first cosmic ray particle of that type to enter the telescope since completion of the last PHA readout of that Telescope. If no particle event occurs, that readout contains zeros. HET and LET PHA blocks always alternate with one another in the data.

IV. Internal Calibration

E-7 contains two sources of internal electrical stimulation which are controlled by ground command (CAL A and CAL B, command C 026). There is no automatic cycling associated with these. Each calibrator, when energized (see description of command C 026), applies test pulses of known amplitude via a 1.0 picofarad capacitor to the input of the charge sensitive preamplifiers. The pulses are generated by SP11 (2048 PPR) from the S/C, and hence are coincident in time. A known data pattern is stimulated for each conbination of CAL A and CAL B on or off, and Pulse Height Analysis in known channels is initiated. The rates stinulated and PHA amplitudes for each experiment P, F1, and F2 are slightly different, and are shown in the attached tables. Additional counts from background radioactivity and noise may be added to the stimulus rate of ~ 2048 pulses per second.

TABLE 3

Stimulus Pattern for E7P

Status Word (octal)	X4X or X5X	X2X or X3X	X6X or X7X
CAL Status	A on B off	A off B on	A on B on
Rates Simulated:	R1 R4 R5b R8a R14 d,e,f R17 b,f SR1 b SR2 e,f,g,h SR3 e,f,g,h	R10 a thru g R11 a,b R12 a,b R13 a R14 a,b,c,g R15 a,b,c R17 a,e R18 a,b,c SR1 c,d SR2 a,b,c SR3 a,b,c	R1 R2 b R4 b R5 a,b R8 b R10 a thru g R14 a thru g R16 a,b R17 a,b,e,f R19 a,b SR1 b
PHA HET A/B/C:	45/55/43	--------	45/56/61
LET A/B/C:	--------	22/32/18	-------

TABLE 4

Stimulus Pattern for E7F1

Status Word	X4X	X2X	X6X
	or	or	or
(octal)	X5X	X3X	X7X
CAL Status	A on	A off	A on
	B off	B on	B on
Rates Simulated:	R10 a thru g	R1	R1
	R11 a,b	R4 b	R4 b
	R12 a,b	R5 b	R5 b
	R13 a	R8 a	R8 b
	R14 a,b,c,g	R14 d,e,f	R10 a thru g
	R15 a,b,c	R17 b,f	R14 a thru g
	R17 a,c	SR1 b	R16 a,b
	R18 a,b,c	SR2 e,f,g,h	R17 a,b,e,f
	SR1 c,d	SR3 e,f,g,h	R19 a,b
	SR2 a,b,c		SR1 b
	SR3 a,b,c		
PHA HET A/B/C:	---------	9/22/29	15/22/29
LET A/B/C:	20/30/25	-------	--------

TABLE 5

Stimulus Pattern for E7F2

Status Word	X4X	X2X	X6X
	or	or	or
(octal)	X5X	X3X	X7X
CAL Status	A on	A off	A on
	B off	B on	B on
Rates Simulated:	R10 a thru f	R1	R1
	R11 a,b	R4 b	R4 b
	R12 a,b	R5 b	R5 b
	R13 a	R8 a	R8 b
	R14 a,b,c,g	R14 d,e,f	R10 a thru f
	R15 a	R17 b,f	R14 a thru g
	R17 a,e	SR1 b	R16 a
	R18 a	SR2 e,f,g,h	R17 a,b,e,f
	SR1 c,d	SR3 e,f,g,h	R19 a
	SR2 a,b,c,d		SR1 b
	SR3 a,b,c,d		
PHA HET A/B/C:	-----------	15/19/25	15/19/35
LET A/B/C:	45/39/19	--------	---------

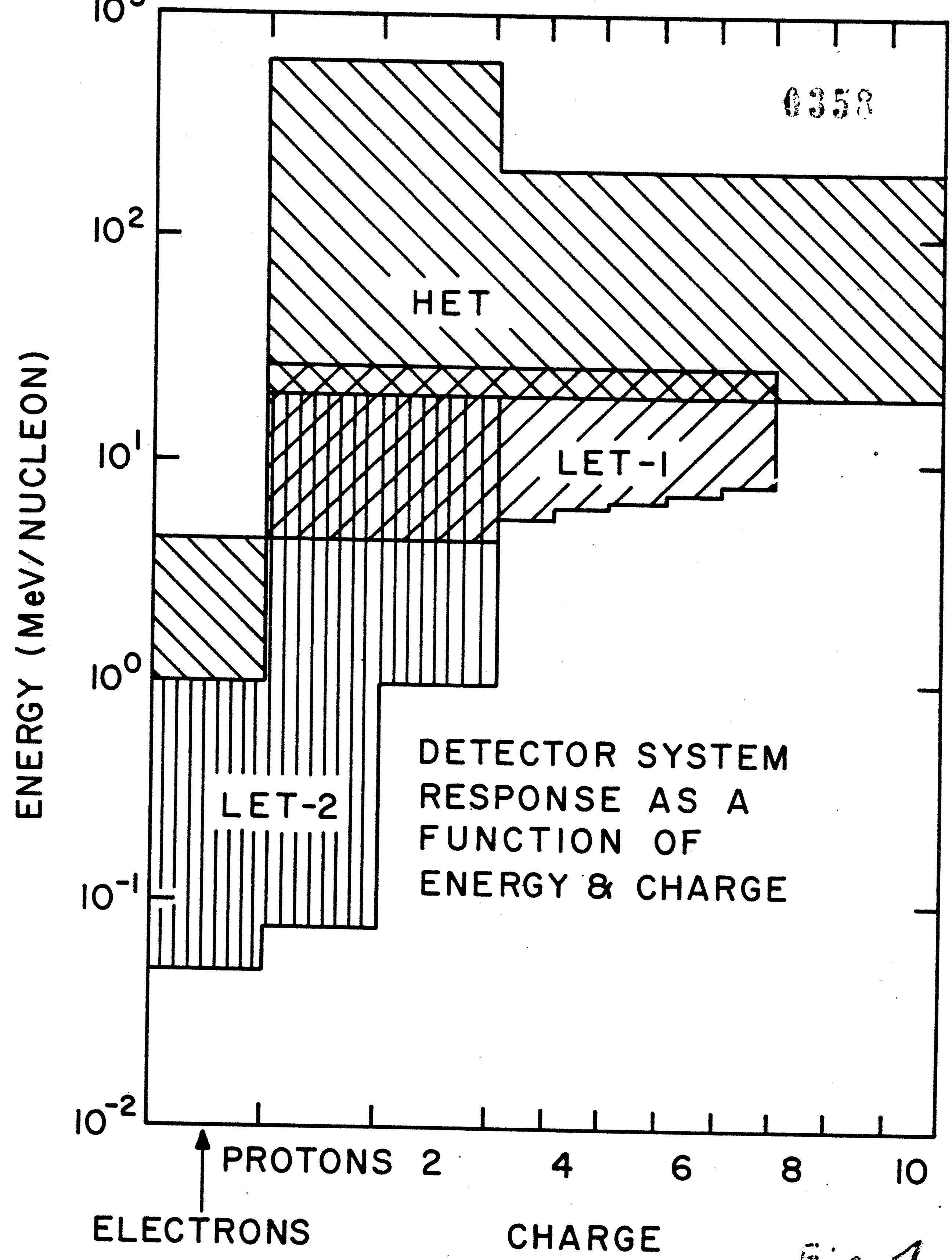
10³
10²
10¹
10⁰
10⁻¹
10⁻²
ENERGY (MeV/NUCLEON)
0358
HET
LET-1
LET-2
DETECTOR SYSTEM RESPONSE AS A FUNCTION OF ENERGY & CHARGE
PROTONS
2
4
6
8
10
ELECTRONS
CHARGE

Fig. 1

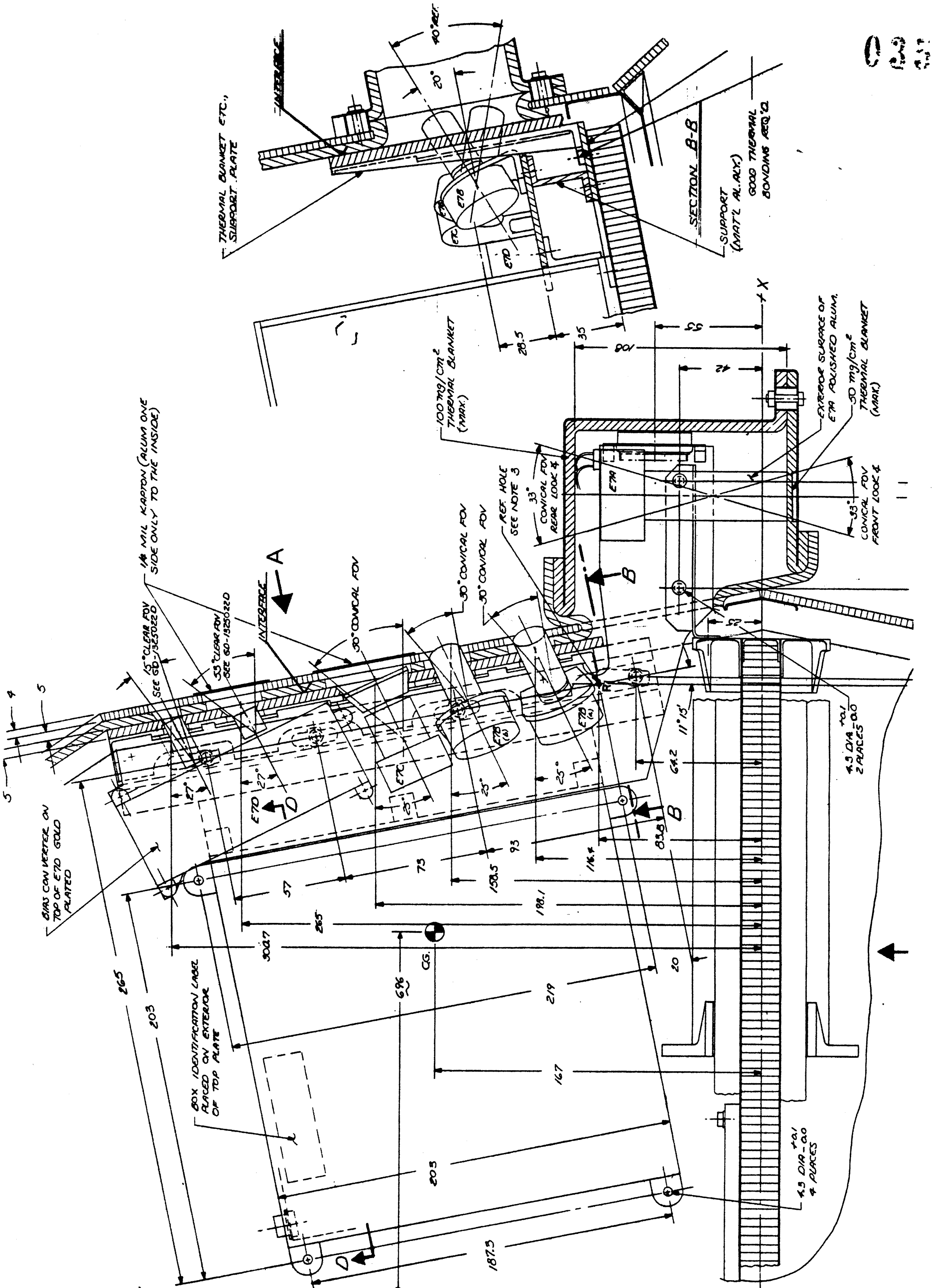
THERMAL BLANKET ETC., SUPPORT PLATE
INTERFACE
40° REF.
20°
E78
E70
SECTION B-B
SUPPORT (MAT'L AL. ALY)
GOOD THERMAL BONDING REQ'D
28.5
35
108
55
42
+X
100 mg/cm² THERMAL BLANKET (MAX)
EXTERIOR SURFACE OF E79 POLISHED ALUM.
50 mg/cm² THERMAL BLANKET (MAX)
E79
33° CONICAL FOV REAR LOOK 4
33° CONICAL FOV FRONT LOOK 4
REF. HOLE SEE NOTE 3
30° CONICAL FOV
30° CONICAL FOV
30° CONICAL FOV
B
B
A
1/4 MIL KAPTON (ALUM ONE SIDE ONLY TO THE INSIDE)
15° CLEAR FOV SEE GD-1325022D
33° CLEAR FOV SEE GD-1325022D
INTERFACE
52
4.5 DIA +0.1 -0.0 2 PLACES
11°15'
E78 (A)
E78 (A)
E70
64.2
83.5
116.4
93
25°
25°
25°
158.5
73
57
198.1
265
302.7
27°
27°
D
5
4
5
BIAS CONVERTER ON TOP OF E70 GOLD PLATED
C.G.
69.6
219
20
167
265
203
BOX IDENTIFICATION LABEL PLACED ON EXTERIOR OF TOP PLATE
205
187.5
D
4.5 DIA +0.1 -0.0 4 PLACES
+Y

Fig. 2

0360

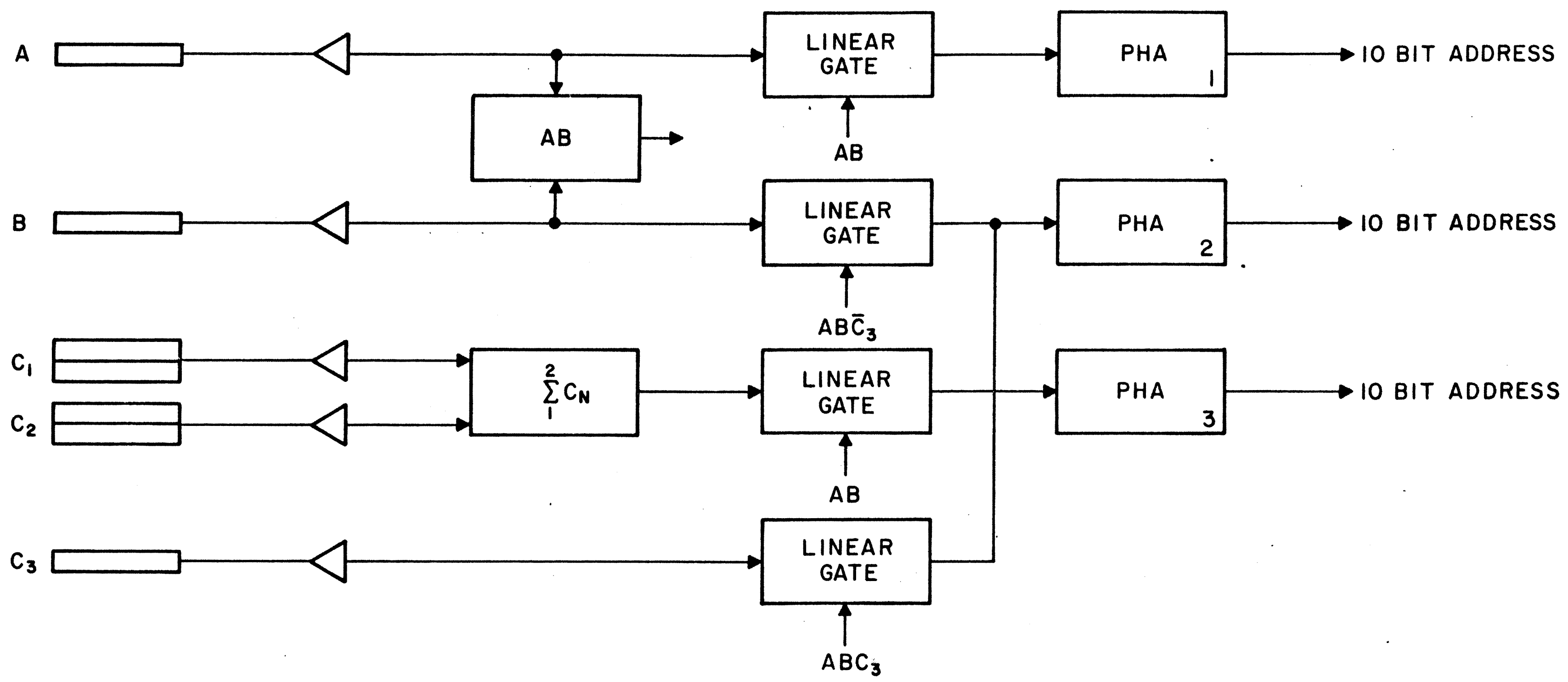

PRIORITY MODES

$AB\bar{C}_3$
$AB\bar{C}_3$ (A > 2 x MIN.)
ABC_3 (A AND C > 2x MIN.)
ABC_3

RATES

A (2 LEVELS)
B, C_1, C_2, C_3
$AB\bar{C}_1\bar{C}_2\bar{C}_3$
$ABC_1\bar{C}_2\bar{C}_3$
$ABC_1C_2\bar{C}_3$
$ABC_1C_2C_3$
(2 LEVELS ON A)

2 BITS REQUIRED TO IDENTIFY PRIORITY MODE.
1 BIT REQUIRED TO IDENTIFY PHA DATA AS H.E.T.
1 BIT REQUIRED TO DETERMINE IF PHA 2 ADDRESS IS B OR C_3
3 BITS REQUIRED TO IDENTIFY SECTOR.
1 BIT REQUIRED FOR RANGE.

E7A SIMPLIFIED HIGH ENERGY DETECTOR

Fig. 3

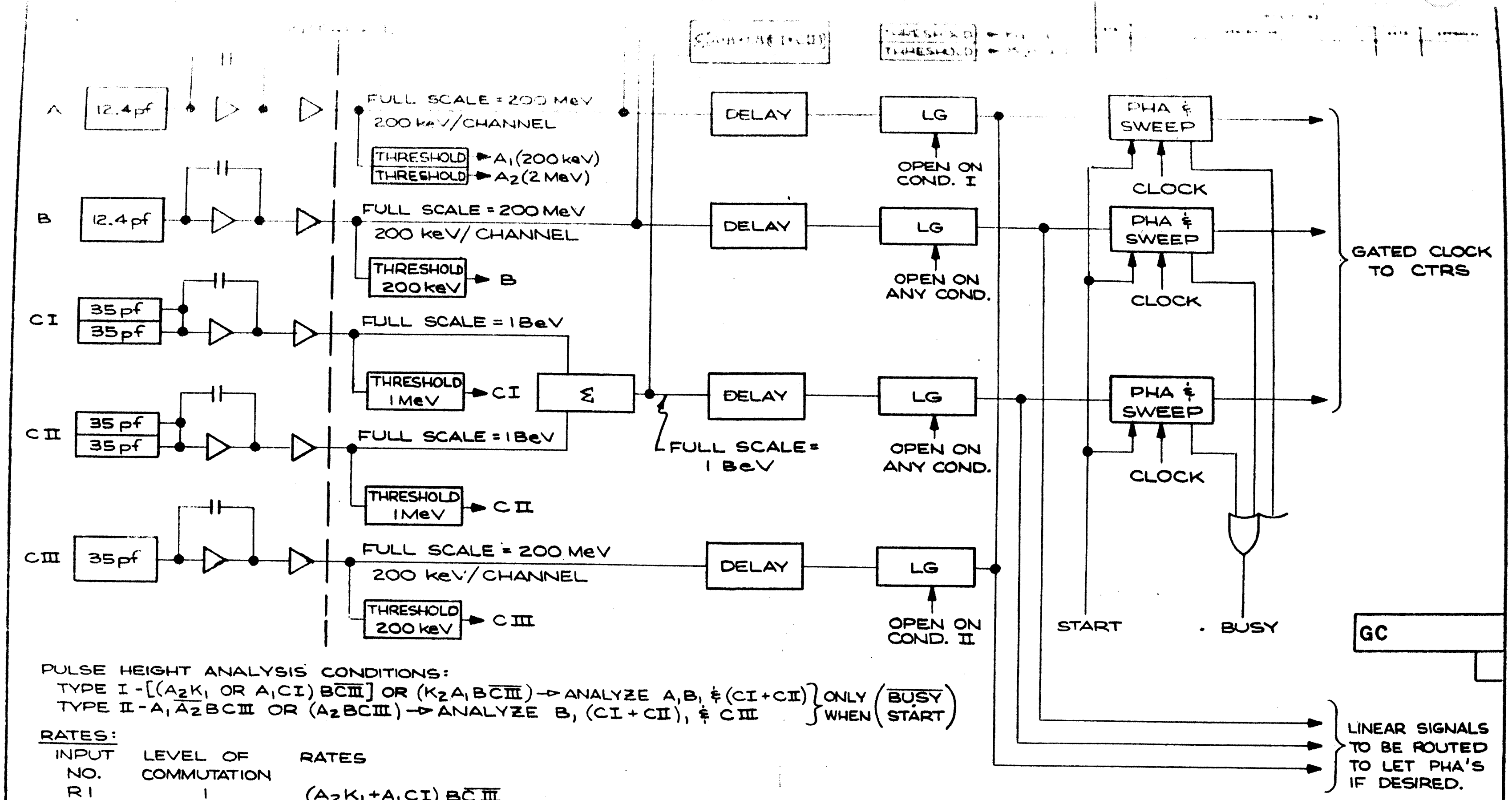

PULSE HEIGHT ANALYSIS CONDITIONS:

$$\left.\begin{array}{l}\text{TYPE I} - [(A_2K_1 \text{ OR } A_1CI)\,B\overline{CIII}] \text{ OR } (K_2A_1B\overline{CIII}) \rightarrow \text{ANALYZE } A, B, \,\&\, (CI+CII)\\ \text{TYPE II} - A_1\overline{A_2}BCIII \text{ OR } (A_2BCIII) \rightarrow \text{ANALYZE } B, (CI+CII), \,\&\, CIII\end{array}\right\} \begin{array}{l}\text{ONLY}\\ \text{WHEN}\end{array}\left(\begin{array}{c}\overline{\text{BUSY}}\\ \text{START}\end{array}\right)$$

RATES:

INPUT NO.	LEVEL OF COMMUTATION	RATES
R1	1	$(A_2K_1+A_1CI)\,B\overline{CIII}$
R2 a,b	2	$A_1\overline{A_2}BCIII, A_1BK_2\overline{CIII}$
R3 a,b	2	$A_2BCIII, A_2BK_2\overline{CI}$ $E_p \geq 50$ MeV, $20 \leq E_\alpha \leq 30$ MeV/NUC.
R4 a,b	2	$A_2BK_2CI\overline{CII}, A_1$ $30 \leq E_\alpha \leq 40$ MeV/NUC.
R5 a,b	2	$A_2BK_2CICII\overline{CIII}, A_2$ $40 \leq E_\alpha \leq 50$ MeV/NUC.
R6 a,b	2	$A_1\overline{A_2}B\overline{CI}, A_1\overline{A_2}BCI\overline{CII}$ $2 \leq E_e \leq 4$ MeV, $4 \leq E_e \leq 6$ MeV
R7 a,b	2	$A_1\overline{A_2}BCICII\overline{CIII}, A_2BK_1\overline{CI}$ $6 \leq E_e \leq 8$ MeV, $20 \leq E_p \leq 30$ MeV
R8 a,b	2	$A_2BK_1CI\overline{CII}, A_2BK_1CICII\overline{CIII}$ $30 \leq E_p \leq 40$ MeV, $40 \leq E_p \leq 50$ MeV
R14	8	B, CI, CII, CIII. THESE RATE OUTPUTS COMMUTATED WITH RATES FROM LET.
SR1	4	$A_1\overline{A_2}BCI\overline{CIII}, A_2BK_1\overline{CIII}$. THIS RATE ALSO COMMUTATED WITH TWO RATES FROM LET.

0361

Fig. 4 E7A

REQ'L	PART NO	DESCRIPTION	MATL	MATL SPEC	UNIT WT.

LIST OF MATERIAL

UNLESS OTHERWISE SPECIFIED
DIMENSIONS ARE IN INCHES
TOLERANCES ON
FRACTIONS [illegible] ANGLES [illegible]

NAME	INIT	DATE
DESIGNER C. TIDWELL		
DRAWN R. DOLEN		5-13-71
CHECKED		
APPROVED		
APPROVED		

BLOCK
DIAGRAM
HET
HELIOS A/B
COSMIC RAY
EXPERIMENT

NATIONAL AERONAUTICS AND
SPACE ADMINISTRATION
GODDARD SPACE FLIGHT CENTER
GREENBELT, MARYLAND

GC 1324977

E68.3 SHEET 1 of 1

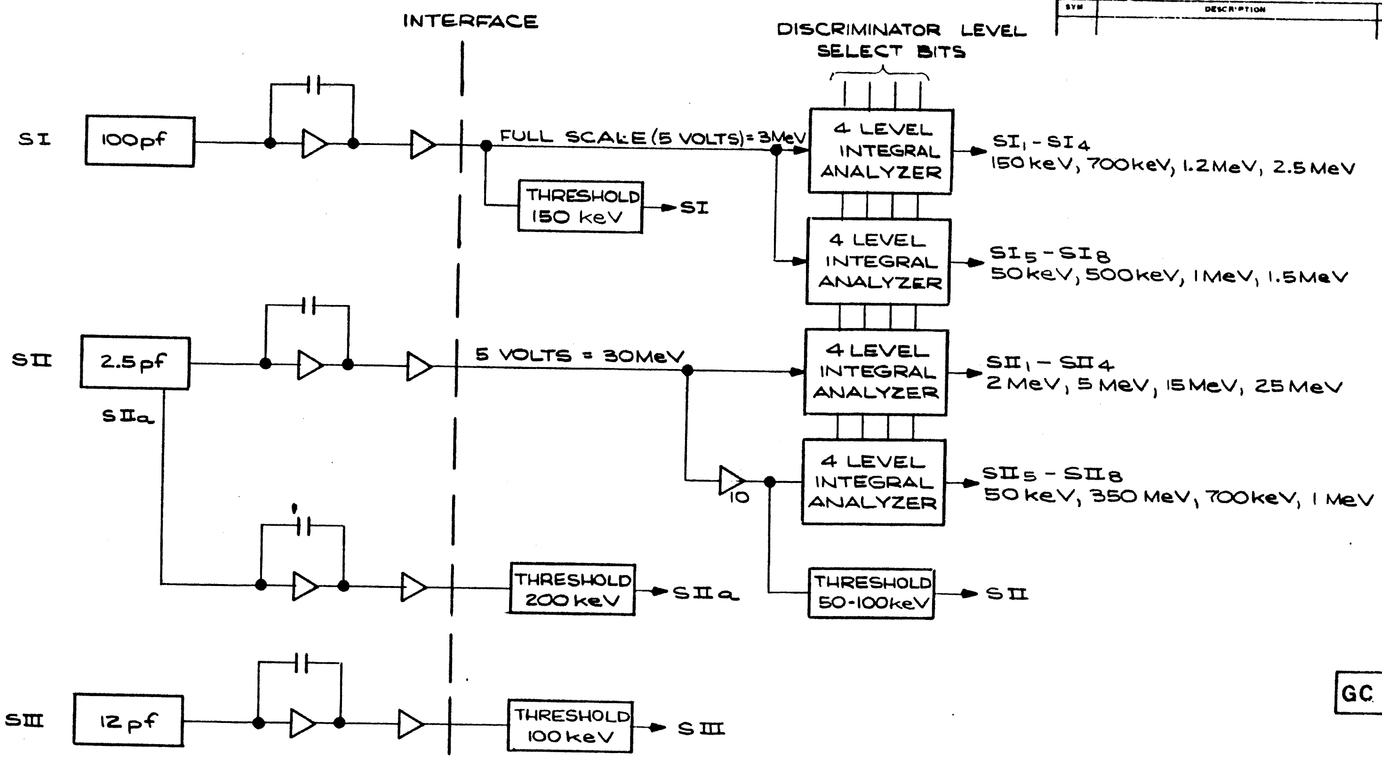

RATES:

INPUT NO.	LEVEL OF COMMUTATION		
R15	4	$SI_i \overline{SII}\ \overline{SII_a}\ \overline{SIII}$	$i = 1,4$ $p^+ \geq 150$ keV, 700 keV, 1.2 MeV, 2.5 MeV
R16	4	$SI\ SII_i\ \overline{SII_a}\ \overline{SIII}$	$i = 1,4$ $p^+ \geq 2$ MeV, 5 MeV, 15 MeV, 25 MeV
R17	8	$SI\ SII\ SIII\ SII_a$	4 CORRESPONDING RATES FROM OTHER VLET COMMUTATED WITH THESE.

SECTORED RATES:

INPUT NO.	LEVEL OF COMMUTATION		
SR 2a	8	$SI_i\ \overline{SII}\ \overline{SII_a}\ \overline{SIII}$	$i = 5,8$ $p^+ > 50$ keV & e^- FROM 50-150 keV, $p^+ > 500$ keV, 1 MeV, 1-5 MeV
SR 2b	8	$\overline{SI}\ SII_i\ \overline{SII_a}\ \overline{SIII}$	$i = 5,8$ $e^- \geq 150$ keV, 350 keV, 700 keV, 1 MeV

Fig. 5

E7B

0362

GC

LIST OF MATERIAL

STILWELL

R DOLEN 5-13-71

BLOCK
DIAGRAM
VLET
HELIOS A/B
COSMIC RAY
EXPERIMENT

NATIONAL AERONAUTICS AND
SPACE ADMINISTRATION
GODDARD SPACE FLIGHT CENTER
GREENBELT MARYLAND

GC 1324978

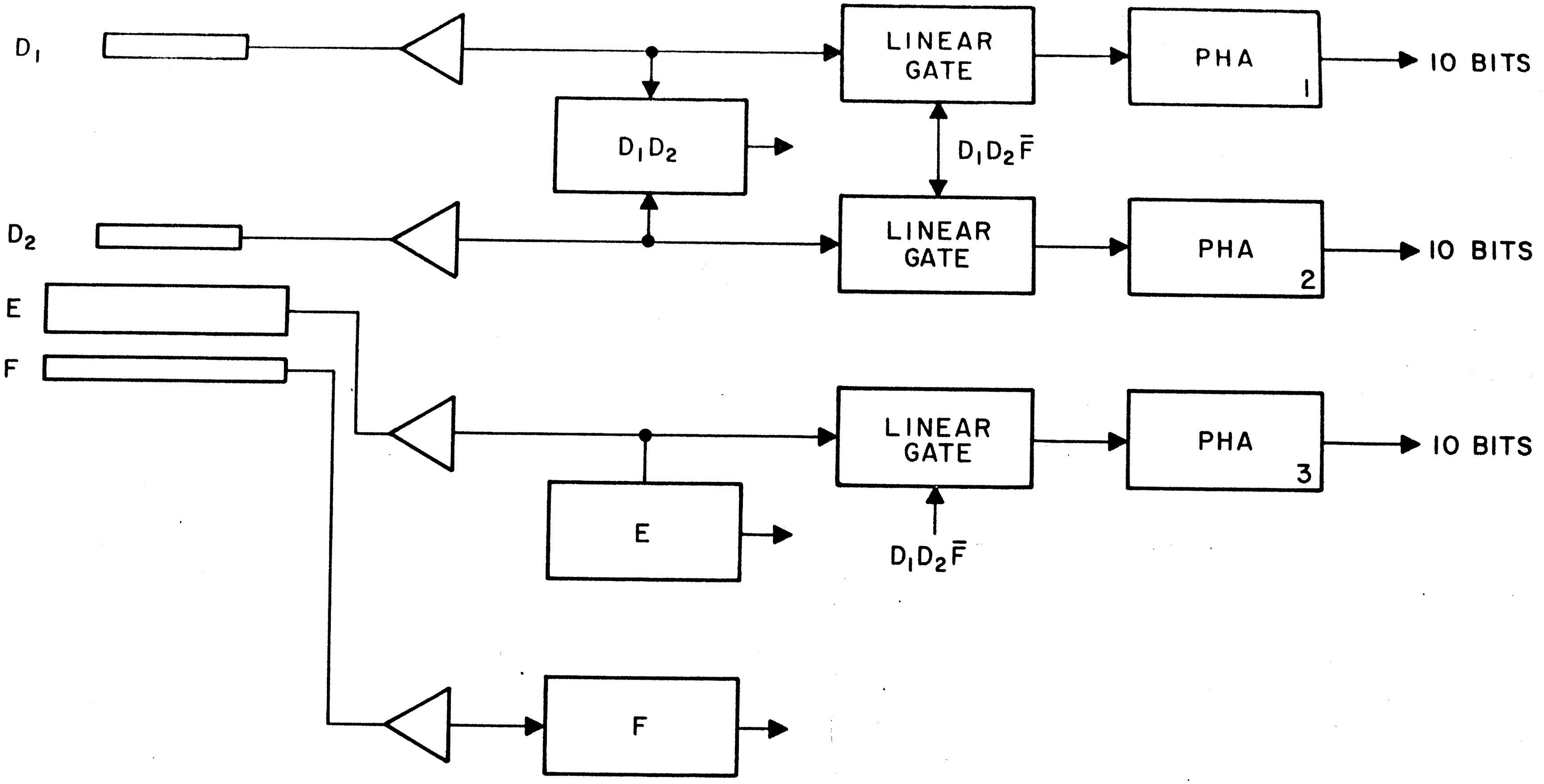

RATES

$D_1D_2(D_1+D_2)E\bar{F}$ (2 LEVELS ON E)

$D_1D_2E\bar{F}$ (2 LEVELS ON E)

D_1 (8 LEVELS)

$\bar{D}_1\bar{D}_2E\bar{F}$

2 BITS REQUIRED TO IDENTIFY PRIORITY MODE.

1 BIT REQUIRED TO IDENTIFY PHA DATA AS LET-I.

3 BITS REQUIRED TO IDENTIFY SECTOR.

Fig. 6 E7C SIMPLIFIED LET DETECTOR

REVISIONS

SYM	DESCRIPTION	DATE	APPROVAL

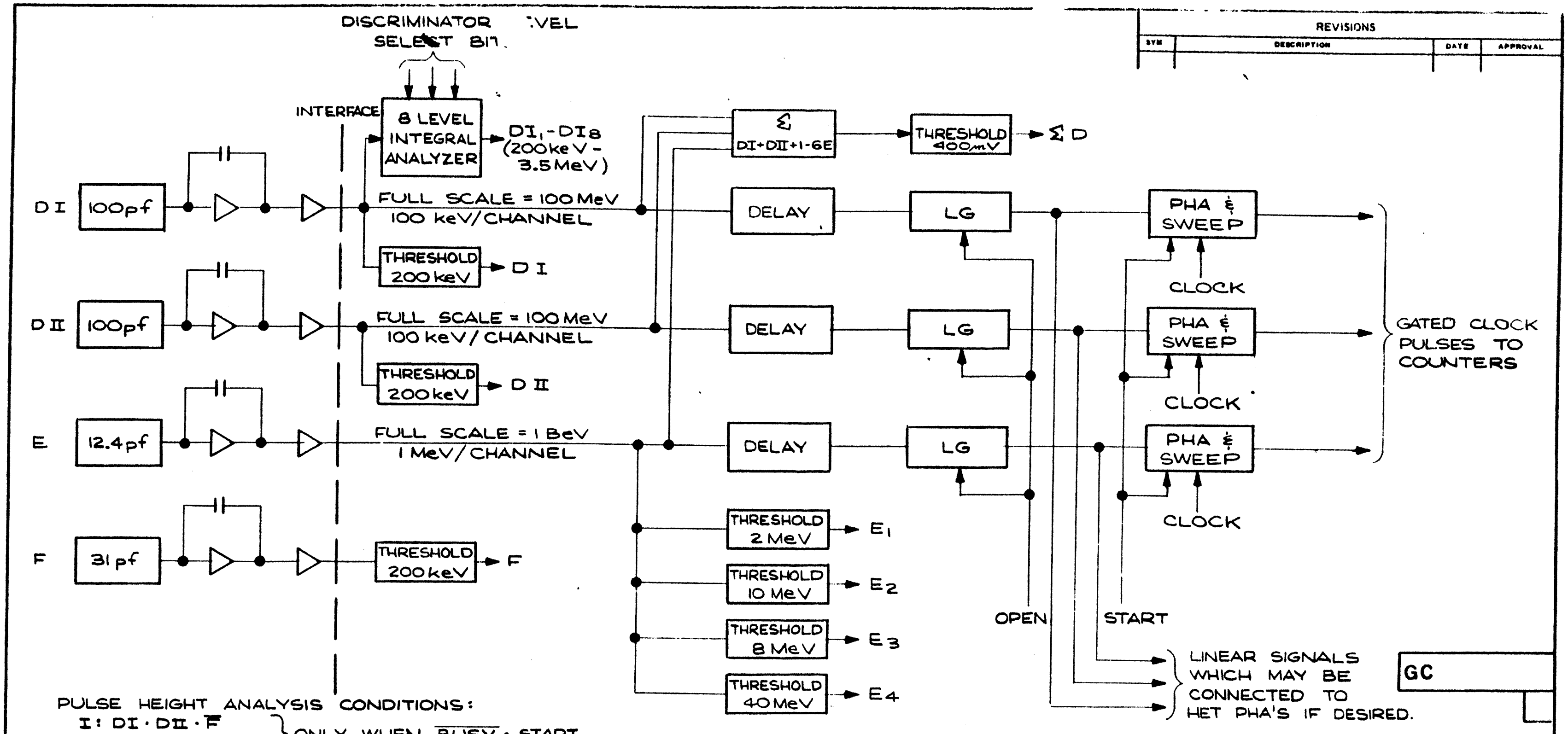

PULSE HEIGHT ANALYSIS CONDITIONS:

I: $DI \cdot DII \cdot \overline{F}$
II: $DI \cdot DII \cdot \Sigma D \cdot \overline{F}$
} ONLY WHEN $\overline{BUSY} \cdot$ START

RATES:

INPUT NO.	LEVEL OF COMMUTATION	RATES
R10a,b	8	$DI_1, DI_2, \ldots, DI_8$ 200 keV ≤ E ≤ 3 MeV/NUC.
R11a,b	2	$DI\ DII\ \overline{F}, DI\ DII\ \Sigma D\ \overline{F}$ 3MeV ≤ E_p ≤ 20MeV, 3 MeV ≤ E_α ≤ 20 MeV/NUC.
R12a,b	2	$DI\ DII\ E_1\overline{F}, DI\ DII\ \Sigma D E_3 \overline{F}$ 6 MeV ≤ E_p ≤ 20MeV, 6 MeV/NUC. ≤ E_α ≤ 20MeV/NUC.
R13a,b	2	$DI\ DII\ E_2\overline{F}, DI\ DII\ \Sigma D E_4 \overline{F}$ 12MeV ≤ E_p ≤ 20MeV, 12 MeV/NUC. ≤ E_α ≤ 20MeV/NUC.
R14a,b	8	DI, DII, E, F 4 ADDITIONAL RATES FROM HET ARE COMMUTATED WITH THESE.
SR1	4	$DI, DII\ \overline{F}, DI\ DII\ E_1\overline{F}$ SAME AS R11a AND R12a ABOVE. THESE TWO RATES ALSO COMMUTATED WITH TWO RATES FROM HET.

LET-I INTEGRAL ANALYZER LEVELS

DI_1	.2 MeV
DI_2	.3 MeV
DI_3	.43 MeV
DI_4	.64 MeV
DI_5	.94 MeV
DI_6	1.4 MeV
DI_7	2.0 MeV
DI_8	3.0 MeV

0364

Fig. 7 E7C

LIST OF MATERIAL

UNLESS OTHERWISE SPECIFIED
DIMENSIONS ARE IN INCHES
TOLERANCES ON

DESIGNER D. STILWELL
DRAWN R. DOLEN 5-13-71

BLOCK DIAGRAM LET
HELIOS A/B COSMIC RAY EXPERIMENT

NATIONAL AERONAUTICS AND SPACE ADMINISTRATION
GODDARD SPACE FLIGHT CENTER
GREENBELT, MARYLAND

GC 1324976

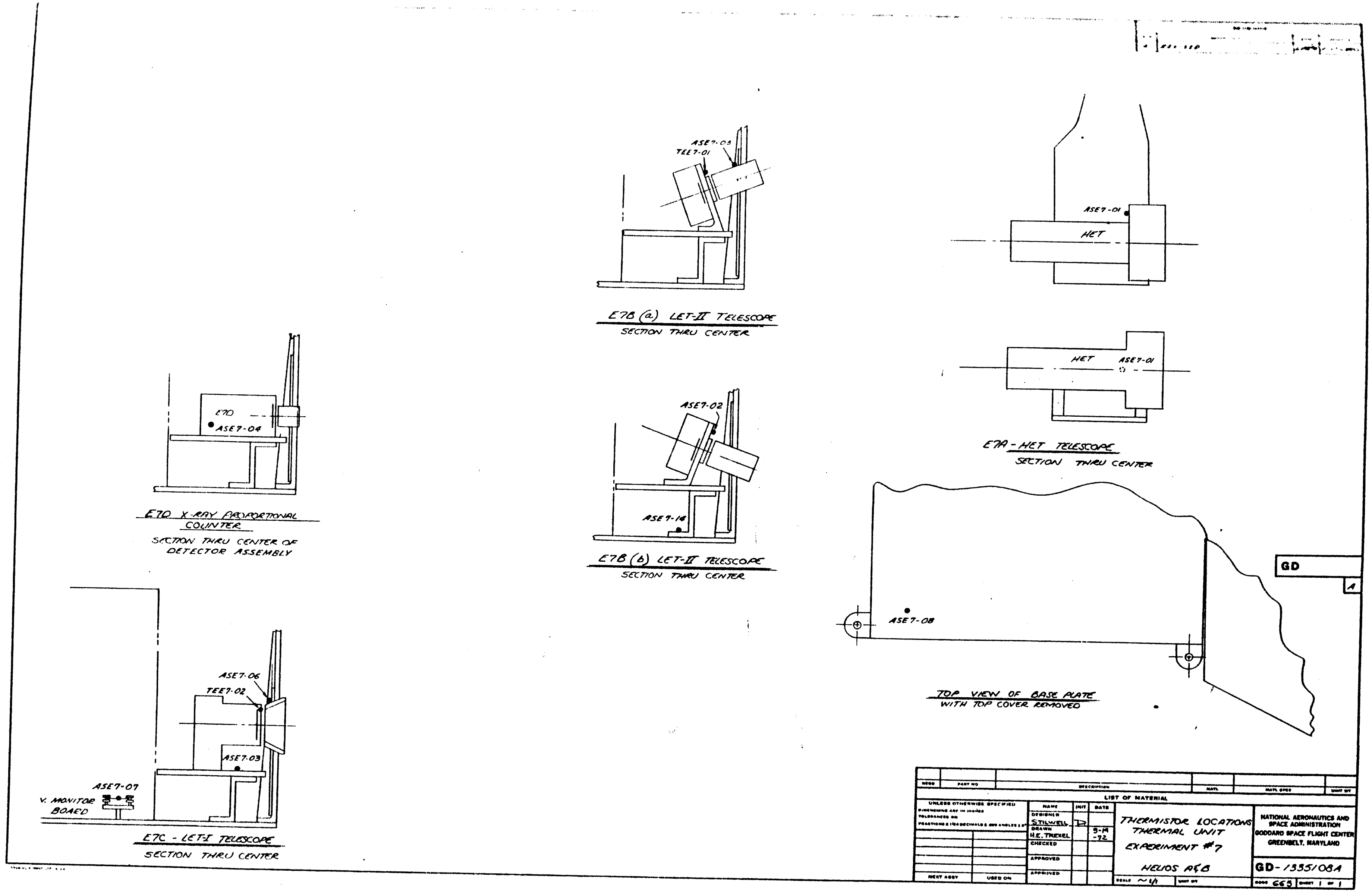
ASE7-03
TEE7-01
E7B (a) LET-II TELESCOPE
SECTION THRU CENTER
ASE7-01
HET
HET
ASE7-01
E7A - HET TELESCOPE
SECTION THRU CENTER
E7D
ASE7-04
E7D X-RAY PROPORTIONAL COUNTER
SECTION THRU CENTER OF DETECTOR ASSEMBLY
ASE7-02
ASE7-14
E7B (b) LET-II TELESCOPE
SECTION THRU CENTER
ASE7-08
TOP VIEW OF BASE PLATE
WITH TOP COVER REMOVED
GD
A
ASE7-06
TEE7-02
ASE7-03
ASE7-07
V. MONITOR BOARD
E7C - LET-I TELESCOPE
SECTION THRU CENTER
REQD
PART NO
DESCRIPTION
MATL
MATL SPEC
UNIT WT
LIST OF MATERIAL
UNLESS OTHERWISE SPECIFIED
DIMENSIONS ARE IN INCHES
TOLERANCES ON
FRACTIONS ± 1/64 DECIMALS ± .005 ANGLES ± 0°
NEXT ASSY
USED ON
NAME
INIT
DATE
DESIGNER
STILWELL
DRAWN
H.E. TREXEL
5-14-72
CHECKED
APPROVED
APPROVED
THERMISTOR LOCATIONS
THERMAL UNIT
EXPERIMENT #7
HELIOS A&B
SCALE ~1/1
UNIT WT
NATIONAL AERONAUTICS AND SPACE ADMINISTRATION
GODDARD SPACE FLIGHT CENTER
GREENBELT, MARYLAND
GD-1335/08A
CODE 665
SHEET 1 OF 1

Fig. 8

Appendix B - Helios 1 and 2 Mode Table

This Appendix was taken from the "User's Manual for the Helios Spacecraft" and describes the amount of rates and PHA data which are taken in various spacecraft telemetry modes.

Table 1: Rate Counter and the Corresponding Coincidence/Anti-coincidence Rates

RATE	COINCIDENCE DESCRIPTION
SR1A{1}	A1.¬A2.B.C1.¬C3{1}
SR1A{2}	A1.¬A2.B.C1.¬C3{2}
SR1A{3}	A1.¬A2.B.C1.¬C3{3}
SR1A{4}	A1.¬A2.B.C1.¬C3{4}
SR1A{5}	A1.¬A2.B.C1.¬C3{5}
SR1A{6}	A1.¬A2.B.C1.¬C3{6}
SR1A{7}	A1.¬A2.B.C1.¬C3{7}
SR1A{8}	A1.¬A2.B.C1.¬C3{8}
SR1A{9}	A1.¬A2.B.C1.¬C3{9}
SR1B{1}	A2.B.K1.¬C3{1}
SR1B{2}	A2.B.K1.¬C3{2}
SR1B{3}	A2.B.K1.¬C3{3}
SR1B{4}	A2.B.K1.¬C3{4}
SR1B{5}	A2.B.K1.¬C3{5}
SR1B{6}	A2.B.K1.¬C3{6}
SR1B{7}	A2.B.K1.¬C3{7}
SR1B{8}	A2.B.K1.¬C3{8}
SR1B{9}	A2.B.K1.¬C3{9}
SR1C{1}	D1.D2.¬F{1}
SR1C{2}	D1.D2.¬F{2}
SR1C{3}	D1.D2.¬F{3}
SR1C{4}	D1.D2.¬F{4}
SR1C{5}	D1.D2.¬F{5}
SR1C{6}	D1.D2.¬F{6}
SR1C{7}	D1.D2.¬F{7}
SR1C{8}	D1.D2.¬F{8}
SR1C{9}	D1.D2.¬F{9}
SR1D{1}	D1.D2.E1.¬F{1}
SR1D{2}	D1.D2.E1.¬F{2}
SR1D{3}	D1.D2.E1.¬F{3}
SR1D{4}	D1.D2.E1.¬F{4}
SR1D{5}	D1.D2.E1.¬F{5}
SR1D{6}	D1.D2.E1.¬F{6}
SR1D{7}	D1.D2.E1.¬F{7}
SR1D{8}	D1.D2.E1.¬F{8}
SR1D{9}	D1.D2.E1.¬F{9}
SR1H{1}	WIDE ANGLE X-RAY
SR1H{2}	WIDE ANGLE X-RAY
SR1H{3}	WIDE ANGLE X-RAY
SR1H{4}	WIDE ANGLE X-RAY
SR1H{5}	WIDE ANGLE X-RAY
SR1H{6}	WIDE ANGLE X-RAY
SR1H{7}	WIDE ANGLE X-RAY
SR1H{8}	WIDE ANGLE X-RAY
SR1H{9}	WIDE ANGLE X-RAY
SR2A{1}	S1{5}.¬S2.¬S2{A}.¬S3{1}
SR2A{2}	S1{5}.¬S2.¬S2{A}.¬S3{2}
SR2A{3}	S1{5}.¬S2.¬S2{A}.¬S3{3}
SR2A{4}	S1{5}.¬S2.¬S2{A}.¬S3{4}
SR2A{5}	S1{5}.¬S2.¬S2{A}.¬S3{5}
SR2A{6}	S1{5}.¬S2.¬S2{A}.¬S3{6}
SR2A{7}	S1{5}.¬S2.¬S2{A}.¬S3{7}
SR2A{8}	S1{5}.¬S2.¬S2{A}.¬S3{8}
SR2A{9}	S1{5}.¬S2.¬S2{A}.¬S3{9}
SR2B{1}	S1{6}.¬S2.¬S2{A}.¬S3{1}
SR2B{2}	S1{6}.¬S2.¬S2{A}.¬S3{2}
SR2B{3}	S1{6}.¬S2.¬S2{A}.¬S3{3}
SR2B{4}	S1{6}.¬S2.¬S2{A}.¬S3{4}
SR2B{5}	S1{6}.¬S2.¬S2{A}.¬S3{5}
SR2B{6}	S1{6}.¬S2.¬S2{A}.¬S3{6}
SR2B{7}	S1{6}.¬S2.¬S2{A}.¬S3{7}
SR2B{8}	S1{6}.¬S2.¬S2{A}.¬S3{8}
SR2B{9}	S1{6}.¬S2.¬S2{A}.¬S3{9}
SR2C{1}	S1{7}.¬S2.¬S2{A}.¬S3{1}
SR2C{2}	S1{7}.¬S2.¬S2{A}.¬S3{2}
SR2C{3}	S1{7}.¬S2.¬S2{A}.¬S3{3}
SR2C{4}	S1{7}.¬S2.¬S2{A}.¬S3{4}
SR2C{5}	S1{7}.¬S2.¬S2{A}.¬S3{5}
SR2C{6}	S1{7}.¬S2.¬S2{A}.¬S3{6}
SR2C{7}	S1{7}.¬S2.¬S2{A}.¬S3{7}
SR2C{8}	S1{7}.¬S2.¬S2{A}.¬S3{8}
SR2C{9}	S1{7}.¬S2.¬S2{A}.¬S3{9}
SR2D{1}	S1{8}.¬S2.¬S2{A}.¬S3{1}
SR2D{2}	S1{8}.¬S2.¬S2{A}.¬S3{2}
SR2D{3}	S1{8}.¬S2.¬S2{A}.¬S3{3}
SR2D{4}	S1{8}.¬S2.¬S2{A}.¬S3{4}
SR2D{5}	S1{8}.¬S2.¬S2{A}.¬S3{5}
SR2D{6}	S1{8}.¬S2.¬S2{A}.¬S3{6}
SR2D{7}	S1{8}.¬S2.¬S2{A}.¬S3{7}
SR2D{8}	S1{8}.¬S2.¬S2{A}.¬S3{8}
SR2D{9}	S1{8}.¬S2.¬S2{A}.¬S3{9}
SR2E{1}	¬S1.S2{5}.¬S2{A}.¬S3{1}
SR2E{2}	¬S1.S2{5}.¬S2{A}.¬S3{2}
SR2E{3}	¬S1.S2{5}.¬S2{A}.¬S3{3}
SR2E{4}	¬S1.S2{5}.¬S2{A}.¬S3{4}
SR2E{5}	¬S1.S2{5}.¬S2{A}.¬S3{5}
SR2E{6}	¬S1.S2{5}.¬S2{A}.¬S3{6}
SR2E{7}	¬S1.S2{5}.¬S2{A}.¬S3{7}
SR2E{8}	¬S1.S2{5}.¬S2{A}.¬S3{8}
SR2E{9}	¬S1.S2{5}.¬S2{A}.¬S3{9}
SR2F{1}	¬S1.S2{6}.¬S2{A}.¬S3{1}
SR2F{2}	¬S1.S2{6}.¬S2{A}.¬S3{2}
SR2F{3}	¬S1.S2{6}.¬S2{A}.¬S3{3}
SR2F{4}	¬S1.S2{6}.¬S2{A}.¬S3{4}
SR2F{5}	¬S1.S2{6}.¬S2{A}.¬S3{5}
SR2F{6}	¬S1.S2{6}.¬S2{A}.¬S3{6}
SR2F{7}	¬S1.S2{6}.¬S2{A}.¬S3{7}
SR2F{8}	¬S1.S2{6}.¬S2{A}.¬S3{8}
SR2F{9}	¬S1.S2{6}.¬S2{A}.¬S3{9}
SR2G{1}	¬S1.S2{7}.¬S2{A}.¬S3{1}
SR2G{2}	¬S1.S2{7}.¬S2{A}.¬S3{2}
SR2G{3}	¬S1.S2{7}.¬S2{A}.¬S3{3}
SR2G{4}	¬S1.S2{7}.¬S2{A}.¬S3{4}
SR2G{5}	¬S1.S2{7}.¬S2{A}.¬S3{5}
SR2G{6}	¬S1.S2{7}.¬S2{A}.¬S3{6}
SR2G{7}	¬S1.S2{7}.¬S2{A}.¬S3{7}
SR2G{8}	¬S1.S2{7}.¬S2{A}.¬S3{8}
SR2G{9}	¬S1.S2{7}.¬S2{A}.¬S3{9}
SR2H{1}	¬S1.S2{8}.¬S2{A}.¬S3{1}
SR2H{2}	¬S1.S2{8}.¬S2{A}.¬S3{2}
SR2H{3}	¬S1.S2{8}.¬S2{A}.¬S3{3}
SR2H{4}	¬S1.S2{8}.¬S2{A}.¬S3{4}
SR2H{5}	¬S1.S2{8}.¬S2{A}.¬S3{5}
SR2H{6}	¬S1.S2{8}.¬S2{A}.¬S3{6}
SR2H{7}	¬S1.S2{8}.¬S2{A}.¬S3{7}
SR2H{8}	¬S1.S2{8}.¬S2{A}.¬S3{8}
SR2H{9}	¬S1.S2{8}.¬S2{A}.¬S3{9}
SR3A{1}	S1{5}.¬S2.¬S2{A}.¬S3{1}
SR3A{2}	S1{5}.¬S2.¬S2{A}.¬S3{2}
SR3A{3}	S1{5}.¬S2.¬S2{A}.¬S3{3}
SR3A{4}	S1{5}.¬S2.¬S2{A}.¬S3{4}
SR3A{5}	S1{5}.¬S2.¬S2{A}.¬S3{5}
SR3A{6}	S1{5}.¬S2.¬S2{A}.¬S3{6}
SR3A{7}	S1{5}.¬S2.¬S2{A}.¬S3{7}
SR3A{8}	S1{5}.¬S2.¬S2{A}.¬S3{8}
SR3A{9}	S1{5}.¬S2.¬S2{A}.¬S3{9}
SR3B{1}	S1{6}.¬S2.¬S2{A}.¬S3{1}
SR3B{2}	S1{6}.¬S2.¬S2{A}.¬S3{2}
SR3B{3}	S1{6}.¬S2.¬S2{A}.¬S3{3}
SR3B{4}	S1{6}.¬S2.¬S2{A}.¬S3{4}
SR3B{5}	S1{6}.¬S2.¬S2{A}.¬S3{5}
SR3B{6}	S1{6}.¬S2.¬S2{A}.¬S3{6}
SR3B{7}	S1{6}.¬S2.¬S2{A}.¬S3{7}
SR3B{8}	S1{6}.¬S2.¬S2{A}.¬S3{8}
SR3B{9}	S1{6}.¬S2.¬S2{A}.¬S3{9}
SR3C{1}	S1{7}.¬S2.¬S2{A}.¬S3{1}
SR3C{2}	S1{7}.¬S2.¬S2{A}.¬S3{2}
SR3C{3}	S1{7}.¬S2.¬S2{A}.¬S3{3}
SR3C{4}	S1{7}.¬S2.¬S2{A}.¬S3{4}
SR3C{5}	S1{7}.¬S2.¬S2{A}.¬S3{5}
SR3C{6}	S1{7}.¬S2.¬S2{A}.¬S3{6}
SR3C{7}	S1{7}.¬S2.¬S2{A}.¬S3{7}
SR3C{8}	S1{7}.¬S2.¬S2{A}.¬S3{8}
SR3C{9}	S1{7}.¬S2.¬S2{A}.¬S3{9}
SR3D{1}	S1{8}.¬S2.¬S2{A}.¬S3{1}
SR3D{2}	S1{6}.¬S2.¬S2{A}.¬S3{2}
SR3D{3}	S1{8}.¬S2.¬S2{A}.¬S3{3}
SR3D{4}	S1{8}.¬S2.¬S2{A}.¬S3{4}

line	Rate Word 4	Rate Word 3	Rate Word 2	37	38	39	40	41 DS 4	42 DS 3	43 DS 2	44 D	45 C	46 B	47 A	48 ID	
1	S+XR(1)	S-XR(2)	S-XR(3)	X-Ray Exec. Reg.							0	0	0	0	1	1
2	S-XR(4)	S-XR(5)	S XR(6)	C5	C4	C3	C2	U-Sectored Rate Seq. ID			1	0	0	0	1	17
3	S-XR(7)	S-XR(8)	US XR(R20)	R9a on R9b				MSB	"	LSB	0	1	0	0	1	9
4	R16	R18	R19	X4	X3	X2	X1		"	R9A	1	1	0	0	1	25
5	R2	R3	R4						"	R9B	0	0	1	0	1	5
6	R5	R6	R7	C5	C4	C3	C2		"		1	0	1	0	1	21
7	R8	R10	R11	R1					"		0	1	1	0	1	13
8	R12	R13	R15	X4	X3	X2	X1		"		1	1	1	0	1	29
9	SR1-(1)	SR2-(1)	SR3-(1)	Roll vector MSB's				Sectored Rate Seq. ID			0	0	0	1	1	3
10	SR1-(2)	SR2-(2)	SR3-(2)	C5	C4	C3	C2		"		1	0	0	1	1	19
11	SR1-(3)	SR2-(3)	SR3-(3)	R14					"		0	1	0	1	1	11
12	SR1-(4)	SR2-(4)	SR3-(4)	X4	X3	X2	X1		"		1	1	0	1	1	27
13	SR1-(5)	SR2-(5)	SR3-(5)	Roll vector LSB's					"		0	0	1	1	1	7
14	SR1-(6)	SR2-(6)	SR3-(6)	C5	C4	C3	C2		"		1	0	1	1	1	23
15	SR1-(7)	SR2-(7)	SR3-(7)	R17					"		0	1	1	1	1	15
16	SR1-(8)	SR2-(8)	SR3-(8)	X4	X3	X2	X1		"		1	1	1	1	1	31

		RATE INPUT	RATE	COMMUTATION BITS TO SELECT						DET	
				A/B	SEQ. 1	SEQ. 2	SSEQ. 1	SSEQ 2	SSEQ. 3		
	1	R1	$(A_2K_1+A_1CI)B\overline{CIII}$						1	HET	
	2	R2	$A_1\overline{A_2}BCIII$	0					2		
			$A_1BK_2\overline{CIII}$	1					3		
	2	R3	A_2BCIII	0					4		
			$A_2BK_2\overline{CI}$	1					5		
	2	R4	$A_2BK_2CI\overline{CII}$	0					6		
			A_1	1					7		
	2	R5	$A_2BK_2CICII\overline{CIII}$	0					8		
			A_2	1					9		
	2	R6	$A_1\overline{A_2}B\overline{CI}$	0					10		
			$A_1\overline{A_2}BCI,\overline{CII}$	1					11		
	2	R7	$A_1\overline{A_2}BCICII\overline{CIII}$	0					12		
			$A_2BK_1\overline{CI}$	1					13		
	2	R8	$A_2BK_1CI\overline{CII}$	0					14		
16			$A_2BK_1CICII\overline{CIII}$	1					15		
	2	R9	IJS							~~X-RAY~~	
			$\overline{SI}\,\overline{SII}\,\overline{SII_a}\,\overline{SIII}$	0	1,3,5,7				16		VLET 1
			$\overline{SI}\,SI\,\overline{SII_a}\,\overline{SIII}$	1	2,4,6,8				17		VLET 2
	8	R10	DI_1	0	0	0			18	LET	
			⋮	LSB		MSB			⋮		
			DI_8	1	1	1			25		
	2	R11	$DI\,DII\,\overline{F}$	0					26		
			$DI\,DII\,ED\overline{F}$	1					27		
6	2	R12	$DI\,DII\,E_1\overline{F}$	0					28		
			$DI\,DII\,EDE_3\overline{F}$	1					29		
	2	R13	$DI\,DII\,E_2\overline{F}$	0					30		
			$DI\,DII\,EDE_4\overline{F}$	1					31		
	8	R14	DI	0	0				32		
			DII	1	0				33		
			E_1	0	1				34		
			F	1	1				35		
			B	0	0	1			36	HET	
			CI	1	0	1			37		
			CII	0	1	1			38		
			CIII	1	1	1			39		
	4	R15	$SI_1\overline{SII}\,\overline{SII_a}\,\overline{SIII}$	0	0	1,5			40	VLET 1	
			$SI_2\overline{SII}\,\overline{SII_a}\,\overline{SIII}$	1	0	2,6			41		
			$SI_3\overline{SII}\,\overline{SII_a}\,\overline{SIII}$	0	1	3,7			42		
			$SI_4\overline{SII}\,\overline{SII_a}\,\overline{SIII}$	1	1	4,8			43		
	4	R16	$\overline{SI}\,SII_1\overline{SII_a}\,\overline{SIII}$	0	0	1,5			44		
			$\overline{SI}\,SII_2\overline{SII_a}\,\overline{SIII}$	1	0	2,6			45		
			$\overline{SI}\,SII_3\overline{SII_a}\,\overline{SIII}$	0	1	3,7			46		
			$\overline{SI}\,SII_4\overline{SII_a}\,\overline{SIII}$	1	1	4,8			47		
	8	R17	SI VLET-1	0	0	0			48		
			SII VLET-1	1	0	0			49		
			SII_a VLET-1	0	1	0			50		
			SIII VLET-1	1	1	0			51		
			SI VLET-2	0	0	1			52	VLET 2	
			SII VLET-2	1	0	1			53		
			SII_a VLET-2	0	1	1			54		
			SIII VLET-2	1	1	1			55		
		R20	USXR						56		← X-RAY
	4	R18	$SI_1\overline{SII}\,\overline{SII_a}\,\overline{SIII}$	0	0	1,5			57		
			$SI_2\overline{SII}\,\overline{SII_a}\,\overline{SIII}$	1	0	2,6			58		
12			$SI_3\overline{SII}\,\overline{SII_a}\,\overline{SIII}$	0	1	3,7			59		
			$SI_4\overline{SII}\,\overline{SII_a}\,\overline{SIII}$	1	1	4,8			60		
	4	R19	$\overline{SI}\,SII_1\overline{SII_a}\,\overline{SIII}$	0	0				61		
			$\overline{SI}\,SII_2\overline{SII_a}\,\overline{SIII}$	1	0				62		
			$\overline{SI}\,SII_3\overline{SII_a}\,\overline{SIII}$	0	1				63		
			$\overline{SI}\,SII_4\overline{SII_a}\,\overline{SIII}$	1	1				64		
	4	SR1	$A_1\overline{A_2}BCI\overline{CIII}$	1	5	65-72	0	0	0	HET	
			$A_2BK_1\overline{CIII}$	2	6	73-80	1	0	0		
			$DI\,DII\,\overline{F}$	3	7	81-88	0	1	0	LET	
			$DI\,DII\,E_1\overline{F}$	4	8	89-96	1	1	0		
	8	SR4	TBS X-Ray.			92-104	0	0	1	X-RAY	
							1	0	1		
							0	1	1		
							1	1	1		
	64	SR2	$SI_5\overline{SII}\,\overline{SII_a}\,\overline{SIII}$	1		105-112	0	0	0	VLET 1	
			$SI_6\overline{SII}\,\overline{SII_a}\,\overline{SIII}$	2		113-120	1	0	0		
			$SI_7\overline{SII}\,\overline{SII_a}\,\overline{SIII}$	3		121-128	0	1	0		
			$SI_8\overline{SII}\,\overline{SII_a}\,\overline{SIII}$	4		129-136	1	1	0		
			$\overline{SI}\,SII_5\overline{SII_a}\,\overline{SIII}$	5		137-144	0	0	1		
			$\overline{SI}\,SII_6\overline{SII_a}\,\overline{SIII}$	6		145-152	1	0	1		
			$\overline{SI}\,SII_7\overline{SII_a}\,\overline{SIII}$	7		153-160	0	1	1		
			$\overline{SI}\,SII_8\overline{SII_a}\,\overline{SIII}$	8		161-168	1	1	1		
	64	SR3	$SI_5\overline{SII}\,\overline{SII_a}\,\overline{SIII}$			169-176	0	0	0	VLET 2	
			$SI_6\overline{SII}\,\overline{SII_a}\,\overline{SIII}$			177-184	1	0	0		
			$SI_7\overline{SII}\,\overline{SII_a}\,\overline{SIII}$			185-192	0	1	0		
			$SI_8\overline{SII}\,\overline{SII_a}\,\overline{SIII}$			193-200	1	1	0		
			$\overline{SI}\,SII_5\overline{SII_a}\,\overline{SIII}$			201-208	0	0	1		
			$\overline{SI}\,SII_6\overline{SII_a}\,\overline{SIII}$			209-216	1	0	1		
			$\overline{SI}\,SII_7\overline{SII_a}\,\overline{SIII}$			217-224	0	1	1		
			$\overline{SI}\,SII_8\overline{SII_a}\,\overline{SIII}$			225-232	1	1	1		

LIST OF MATERIAL

UNLESS OTHERWISE SPECIFIED

	NAME	INIT	DATE
DESIGNER	A. STILWELL		
DRAWN	P. GBANINGER		5.20 '71
CHECKED			
APPROVED			
APPROVED			

RATE
COMMUTATION
TRUTH TABLE
HELIOS A/B
COSMIC RAY
EXPERIMENT

NATIONAL AERONAUTICS AND
SPACE ADMINISTRATION
GODDARD SPACE FLIGHT CENTER
GREENBELT, MARYLAND

GD 1324

0366

MODE TABLE

C The experiment cycle times and other parameters of interest as related to S/C bit rate and format is shown on page 36. Since the internal calibrators (CAL A and CAL B) are pulsed at the *fine sector* rate, the expected number of counts per sectored rate readout can be variable by 8 times number of rolls in the accumulation interval.

Explanation Mode Table

Col. 4. 1 PHA block or 1 PHA EDF = 48 bits
1 Rate Data Block or Line= 48 bits

Col. 5. 1 Cycle $\widehat{=}$ 8 Rate - Data EDF $\widehat{=}$ 128 Rate Blocks, with interspersed PHA blocks, e.g. for 4096 Bps - (5+1)x128 = 768 blocks. (Rate and PHA data)

Col.10. Cycle time = $\frac{\text{Frames per Cycle x 1152}}{\text{BM}}$

Col.11. Chosen accumulation interval for SR counters in rolls

C Col.12. Counts per Readout = $\frac{\text{Accumulation interval x } 2048}{8}$,
since the interval calibrators are pulsing *at* the *fine sector* rate. One SR counter is only counting during 1/8 of a roll or during one 45° sector.

1 EDMF $\widehat{=}$ 1 Cycle $\widehat{=}$ 1 Experiment Data Main Frame

PROJECT HELIOS

EXP. 7

MODE TABLE

I 2.1
p 2

1	2	3	4	5	6	7	8	9	10		11	12
BR	FM	DM	PHA BLOCKS RATE BLOCKS	BLOCKS P.CYCLE	WORDS P.CYCLE	WORDS P.FRAME	FRAMES P.CYCLE	MAIN XX FRAMES P.CYCLE	CYCLE SEC.	TIME MIN.	ROLLS SR COUNTERS	COUNTS PER SR READOUT
4096	5	-	5:1	768	4608	3	1536	22	432	7.2	53	13,568
2048	5	-	5:1	768	4608	3	1536	22	864	14.4	53	13,568
2048	1	-	5:1	768	4608	6	768	11	432	7.2	53	13,568
1024	1	-	3:1	512	3072	6	512	8	576	9.6	69	17,664
512	1	-	1:1	256	1536	6	256	4	576	9.6	69	17,664
512	2	-	3:1	512	3072	12	256	4	576	9.6	69	17,664
256	2	-	1:1	256	1536	12	128	2	576	9.6	69	17,664
128	2	-	1:1	256	1536	12	128	2	1152	19.2	138	35,328
64	2	-	1:1	256	1536	12	128	2	2304	38.4	276	70,656
64	3	-	1:1	256	1536	12	128	2	2304	38.4	276	70,656
32	3	-	1:1	256	1536	12	128	2	4608	76.8	552	141,312
16	3	-	1:1	256	1536	12	128	2	9216	153.6	1104	282,624
8	3	-	1:1	256	1536	12	128	2	18432	307.2	2208	565,248
8	3	B/O^x	0:1	128	768	12	64	1	9216	153.6	1104	282,624

For explanation see page I 2.1 p 1

^{x} Blackout

^{xx}Rounded

1 EDMF ≙ 1 Cycle

0367

Appendix C - The Helios 1 and 2 Spacecraft Data Collection System for Rates and PHA Data

This Appendix consists of a document prepared by D. Stillwell and R. Joyce in 1973, which describes the rates and PHA spacecraft data collection systems for Helios 1 and 2. Information on the Helios experimental data record and orbit/altitude tape formats used by the experimenters can be found in Reference 6.

The GSFC Cosmic Ray Experiment on Helios A/B outputs minor frame data of two basic types, referred to as Rate Data and PHA data. Rate data is simply a 12 bit binary number, packed four numbers to a block which represents the total number of times per accumulation interval that signals exceeding specified amplitudes from one or more detectors in each sensor array (telescope) occurred in coincidence. These rate events are counted (accumulated) in a 24 bit counter for a period of time dependent on bit rate and mode of S/C operation in use. Prior to transmission, data from each 24 bit counter is compressed to 12 bits by converting the number to its logarithm. After receipt of rate data on the ground, the log in each 12 bit rate word is converted back to its integer equivalent and divided by the length of the accumulation interval to yield counts per unit time.

PHA data represents the digitized amplitude of each of three specified detector signals appearing in coincidence. The Pulse Height Analyzer resolves the amplitude of each pulse into one part in 1024 (10 bits). Each amplitude is transmitted in binary form as 12 bit word. Each PHA readout is a quasi-randomly selected coincidence event during the accumulation interval and the data represents the amplitudes of the three detector signals rather than the number of events per unit time. Each PHA event is packed in one 48 bit block.

The ratio of PHA data to rate data is dependent upon the S/C mode and bit rate in use. The readout format is not necessarily synchronous with the modulo-72 major frame sequence. Hence, each 48 bit block contains identifying bits which uniquely identify the type and source of data in that block. At high bit rates (4096 and 2048 bps.) the ratio of PHA data to rate data can be as high as 7 to 1 (i.e. 7 each 48 bit PHA blocks for each 48 bit rate block). At 1024 through 256 bps, the ratio is 3:1. At still lower bit rates the ratio drops to 1:1 and at the lowest bit rates as well as blackout model, all PHA data and selected rate data is excluded from readout.

Rate Data Format

Rate data is packed in 48 bit blocks as shown below. All rate data is ordered most significant bit (MSB) first in time and the ID bits are ordered LSB first. The bits are numbered in the order they appear in time, and have the following significance:

Bit #	
48	Always a "1" for rate data, always a "0" for PHA data
44-47	A,B,C,D are 4 four bits from a modulo-16 counter (A=MSB), specifying one of 16 possible "lines" of rate data. Each line contains 3 1/3 rate words, or 3 words and 4 discreet bits.
41-43	DS2 through DS4 are discrete identifying bits which specify the commutator position for each of the rate words in that block.
37-40	The 4 bits are either DS bits or rate data bits as specified by the line number (bits 44-47). See Figure 2. Four rate counters are readout, in lines 2-4, 6-8, 10-12, and 14-16.
25-36	All 12 bits of word 2 of the specified line.
13-24	All 12 bits of word 3 of the specified line.
1-12	All 12 bits of word 4 of the specified line.

The 12 rate data bits are designated X1, X2, X3, . . . X7, C1, C2, . . . C5 and represent the true binary log of the number of counts accumulated. The X's are the bits of the mantissa and the C's are the bits of the characteristic.

Each 48 bit block contains three complete rate words (words 4, 3, and 2) and either 1/3 of another rate word (word 1) or discreet bits. When word number is combined with line number, one of 48 rate counters is specified in words 4, 3, or 2. Word 1 is distributed through 3 lines, hence 3 consecutive lines are required to read out each word 1. There are 4 additional counter readout in lines 1 through 16. The total number of rate counters is thus 48 plus 4, or 52. Each counter may be commutated through 1, 2, 4, or 8 different coincidence conditions or, in the case of sectored counters, may also be associated with only one 45° increment as the S/C spins. Commutation levels are specified in the discreet bits DS2 through DS8.

Hence, each individual coincidence rate can be uniquely specified only by the combination of line number, word number, and commutation level. There are 230 such unique rates. In the ground computer, each must be extracted from the data converted to integer form, and summed with previous readouts of the same rate to maintain a running total. At the completion of a specified accumulation interval, the summed number of counts in each rate location is divided by the accumulation interval to yield counts per unit time.

Conversion from the logarithm to the integer number may be accomplished as follows. Attached is a drawing of the "MARS" bug, drawing GE-1154-047. This is the electrical performance specification for the accumulator and log compression used in all 52 rate counter positions of the GSFC Experiment. Equation III defines the log and gives the arithmetic relationship that may be used for conversion. However, it is suggested that simply reversing the compression scheme will provide extremely rapid conversion with very few instructions.

Refer to the option 1 logic diagram (upper left). The A reg is a 24 bit binary counter which counts input pulses when permitted by the F and L_o functions. The reset condition of this register is all "1"s, hence the first pulse counted produces all "0"s, the second produces 10000000, etc. At the end of an accumulation interval, the log compressor shifts right the A reg until a "1" appears in the MSB. The next 7 bits, not including the MSB, which is always a "1", are read out as X1 - X7, and the number of shifts is read out as C1 - C5.

To convert a log back to real, first replace the most significant "1" of the mantissa lost during readout, and then shift the appropriate number of shifts as read out in C1 - C5. Then add 1 to account for the reset condition of the A reg. For example, after 6 counts the A reg contains 101000 . . . (total of 24 bits). LSB is in the left. There are 21 leading zeros on the right to be shifted out of the way until A3 appears at the end of the shift register. X1 - X7 will read 0000010(1), where the "1" in A3 which was list is shown in parentheses. C1 - C5 will contain 21 in binary. To re-convert:

(1) Shift left X1 - X7 once, adding the "1" which was lost.
Now X1 - X7 - 0000101.

(2) Shift left 21 times, entering 21 zeros from the right.
We now have 0000101 plus 21 zeros:

$$0000101 \quad \underbrace{000\;.\;.\;.\;.\;0}_{21}$$

(3) Truncate from the left to leave 24 places, right justified, including the 21 zeros. Contents of the A reg has not been restored. LSB is still on the left.

(4) Add 1 to give 011111 . . . , the binary equivalent of 6.

All the above was done referencing the bit field as it appears in the drawing. However, during readout the bits are reversed so that they are read out differently and hence will appear in core differently. For 6 input counts, readout is C5, C4, C3 . . . C1, X7, X6 . . . X1. C5 through C1 (the characteristic) will contain 21, or 11001 (MSB first). X7 through X1 is the mantissa and contains 0100000 (X7 is on the left). The readout of the rate word thus appears in Telemetry as

110010100000

To convert:

(1) Shift right double (i.e., so that the mantissa is entered into another register and saved) seven times entering 0's from the left. This separates the characteristic and the mantissa, leaving the characteristic right justified and the mantissa left justified in two adjacent words.

(2) Shift right the mantissa once, entering "1" from the left. The mantissa is now 101000 . . . for the remainder of the computer word field.

(3) Shift right again, entering 0's from the left, the number of times indicated in the characteristic.

(4) Shift right again to right justify the 24 bit reconstructed field in the computer word. This number of shifts is the computer word length minus 24. The rate word is now in integer form.

(5) Add 1 to the shifted word, and the result is the binary equivalent, in 24 bits, of the total number of counts counted.

For the above algorithm the amount of machine manipulation and coding is small compared to all the arithmetic implied by equation III. There are a few special cases that perhaps are best handled separately, as shown in the notes below the equation in drawing GE-1154-047.

PHA Data Format

Each Pulse Height Analysis event is packed in a single 48 bit block. The block is uniquely identified as being PHA data by bit 48. The block contains three 12 bit amplitude words from either the High Energy Telescope (HET, or E7A) or the Low Energy Telescope (LET, or E7C) and appropriate tag bits specifying more information about the event. Each of the amplitude words is a binary digitization of the pulse amplitude from the corresponding detector. X12 is the MSB and X1 is the LSB. The bits are numbered in the order they appear in time and have the following significance:

Bit #	
48	Always a "0" for PHA data; always a "1" for rate data.
47	H/L bit indicates if PHA data is a HET event (H/L=0) or a LET event (H/L=1).
44-46	T3, T4, and T5 are the sector tags. The orientation of the S/C at the time of each PHA event is encoded in these bits (T3 is MSB) into octants (45°).

Bit#	
37-43	To be specified. Depends on whether data is HET or LET. If HET, Tag bits T6 & T7 specify one of 4 possible coincidence conditions initiating the analysis. The detector pulse digitized in PHA word 1 from the A element of HET if T6=0, and is from the CIII e/event of HET if T6=1. Remaining bits not yet assigned.
25-36	PHA data word 1; 12 bits. If HET event, is amplitude of A or CIII (see T6). If LET event, is amplitude of DI.
13-24	PHA data word 2; 12 bits. If HET event, is amplitude of B. If LET event, is amplitude of DII.
1-12	PHA data word 3; 12 bits. If HET event, is amplitude of (C1 + CII). If LET event, is amplitude of E.

Each amplitude word originates from a 12 bit counter which is reset to all "ones". A channel 1 event toggles each counter stage, producing a readout of all "zeros" for that word. A channel 2 event reads out as 1 (decimal), etc. Each amplitude word must be incremented by 1 in the ground computer to produce the correct amplitude.

There are 7 detectors which are pulse height analyzed. Word one of HET data is shared between the H and CIII elements. The remaining PHA words are uniquely assigned as listed above. The ground computer is required to accumulate frequency histograms representing the number of times each channel number for each detector is read out in the data. Thus, 7 different 1024 channel histograms are required for a total of 7168 computer locations. If core space does not permit such large data bases, each of the seven histograms may be reduced to 256 channels in length by subtracting a number (eg. 0, 255, 511, 767) from the PHA data words. This effectively allows accumulation of a specified quadrant of the full 1024 field. Quadrant specification should be a variable to be entered via keyboard immediately prior to starting an accumulation interval. In this event, two additional channels which accumulate the number of events falling below and above the specified quadrant are also required. The count capacity of each histogram channel should be at least 12 bits, preferably 16.

All PHA data, before it is accepted for inclusion in the histograms, may be required to conform to specified parameters in the Tag bit field T3 - T12. It is required that an operator be able to specify immediately prior to an accumulation interval the conditions defining an acceptable event. In general, no conditions are imposed but it is desirable during muon tests or trouble shooting to have the flexibility of pre-screening each event before including it in the histogram. The total number of events excluded from each histogram should also be counted in another computer word.